YAMAHA

PARTS CATALOGUE

YFM35RD (1BS9) U.S.A.

1M1BS-110E1

( )

YAMAHA GENUINE Parts & Accessories

YFM35RD
PARTS CATALOGUE
©2012 by Yamaha Motor Co., Ltd.
1st edition, April 2012
All rights reserved.
Any reprinting or unauthorized use
without the written permission of
Yamaha Motor Co., Ltd.
is expressly prohibited.
Printed in Japan.

FOREWORD

This Parts Catalogue is related to the parts for the model(s) on the cover page. When you are ordering replacement parts, please refer to this Parts Catalogue and quote both part numbers and part names correctly.

1. Modifications or additions which have been made after the issue of the Parts Catalogue will be announced in the Parts News.
   It is advisable that you make the necessary corrections to the Parts Catalogue according to the Parts News.

2. Abbreviations
   The following abbreviations are used in this Parts Catalogue.

   “UR” Use specified parts number.
   “UN” Use as many as needed.
   “AP” Alternate Parts
   “LM” Locally Made (Parts need to be ordered locally)
   “F#” Frame No. (Applicable machine No.)
   “O/S” Over Size

3. The number of components for assembly
   - Parts, which are to be supplied in an assembly, are listed with a dot (.) in front of the part name as shown below.
   - The numeral appearing to the right of each component part indicates the quantity of parts for each assembly unit.

PART NO.	DESCRIPTION	Q’TY	REMARKS
2F5–83310–60	FRONT FLASHER LIGHT ASSY	2	
115–83311–60	.BULB (6V–18W)	1	

4. Applicable colours of graphics are represented in the “REMARKS” as shown below.

PART NO.	DESCRIPTION	Q’TY	REMARKS
2N4–24110–00–X5	FUEL TANK COMP.	2	MXR
3J1–24240–10	.GRAPHIC, FUEL TANK	1	FOR MXR

5. Note that the illustrations for reference in finding parts numbers are not to be used for assembling. When assembling, please use the applicable service manual.

6. The asterisk (*) before a reference number indicates modified items after the first edition.

7. Applicable Serial No.

Engine Serial No.

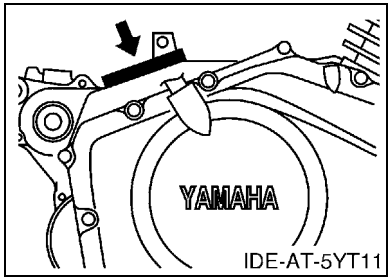

Frame Serial No.

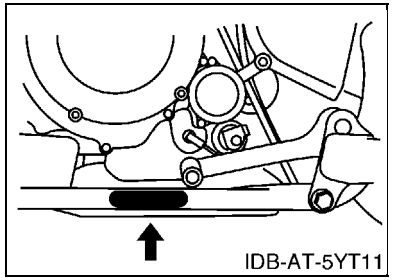

8. Applicable Colour Code (The (*) mark shows Model colour.)

Abbreviation	Colour Name	Colour Code
BWS1(*)	BLUISH WHITE SOLID 1	0892

9. Quantity Column Information

Column No.	Name Of Q’ty Column	Destination
1	USA	U.S.A.

MODEL LABEL

(1) A label called “Model Label” is affixed in the location as indicated in (3) below.
When using this parts catalogue, please be sure to cross–reference the “model code – production code No.” in the catalogue with the “model code – production code No.” indicated on the Model Label affixed onto the product concerned.

(2) “Model Label” Indication

a b
○ xxxx – xxx
● x c

a: Model Type Code
b: Production Code No.
c: Colouring Type

○ 4TW1–010
● A

(3) Model Label Affixing Location

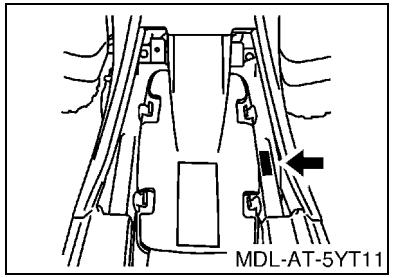

(4) Colouring Information

Model Code	Colouring Type Code	Colour Code	Colour Name	Abbreviation
1BS9	B	0892	BLUISH WHITE SOLID 1	BWS1

(5) Model Code – Production Code Number of Model Listed in This Parts Catalogue

Model Code	Production Code No.	Country (destination)	Model Code	Production Code No.	Country (destination)
1BS9	010	U.S.A.			

CONTENTS

ENGINE

CYLINDER HEAD 1
CYLINDER 2
CRANKSHAFT & PISTON 3
VALVE 5
CAMSHAFT & CHAIN 6
OIL PUMP 7
INTAKE 8
CARBURETOR 9
EXHAUST 11
CRANKCASE 12
CRANKCASE COVER 1 13
STARTER CLUTCH 15
CLUTCH 16
TRANSMISSION 18
SHIFT CAM & FORK 20

CHASSIS

FRAME 22
FRONT FENDER 24
REAR FENDER 25
SIDE COVER 27
REAR ARM 28
REAR SUSPENSION 30
STEERING 31
FRONT SUSPENSION & WHEEL 32
FUEL TANK 34
SEAT 35
FRONT WHEEL 36
FRONT BRAKE CALIPER 37
REAR WHEEL 38
REAR BRAKE 40
STEERING HANDLE & CABLE 41
FRONT MASTER CYLINDER 43
STAND & FOOTREST 44
REAR MASTER CYLINDER 45
GUARD 47
GENERATOR 48
STARTING MOTOR 49
HEADLIGHT 50
TAILLIGHT 51
HANDLE SWITCH & LEVER 52
ELECTRICAL 1 53
EMBLEM & LABEL 1 55

INDEX

NUMERICAL INDEX 56

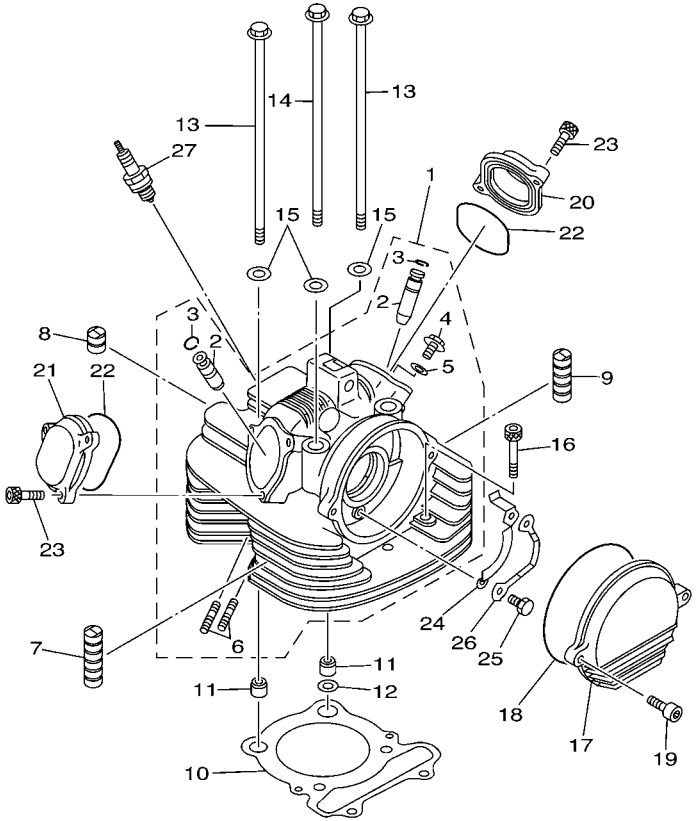

5YTG100-F010

FIG. 1 CYLINDER HEAD

REF. NO.	PART NO.	DESCRIPTION	USA					REMARKS
1	5YT–11101–10	CYLINDER HEAD ASSY	1					
2	3Y1–11133–11	.GUIDE, VALVE 1	2					
3	93440–12052	.CIRCLIP	2					
4	90401–06001	.BOLT, UNION	1					
5	90430–06192	.GASKET	1					
6	90116–06041	.BOLT, STUD	2					
7	3Y1–11127–00	ABSORBER 3	8					
8	31G–11161–00	ABSORBER 1	2					
9	31G–11127–00	ABSORBER 3	2					
10	1UY–11181–01	GASKET, CYLINDER HEAD 1	1					
11	99530–14016	PIN, DOWEL	2					
12	90430–14240	GASKET	1					
13	90105–10137	BOLT, FLANGE	2					
14	90105–10136	BOLT, FLANGE	2					
15	90201–10128	WASHER, PLATE	4					
16	91312–08050	BOLT	2					
17	5NF–11185–00	COVER, CYLINDER HEAD SIDE 3	1					
18	93211–06635	O-RING	1					
19	91312–06025	BOLT	2					
20	2NL–11186–12	COVER, CYLINDER HEAD SIDE 2	1					
21	2NL–11187–11	COVER, CYLINDER HEAD SIDE 3	1					
22	93210–57634	O-RING	2					
23	91312–06020	BOLT	5					
24	3Y1–1111F–00	PLATE	1					
25	97002–06012	BOLT	2					
26	90215–06162	WASHER, LOCK	1					
27	94701–00333	PLUG, SPARK (NGK DR8EA)	1					

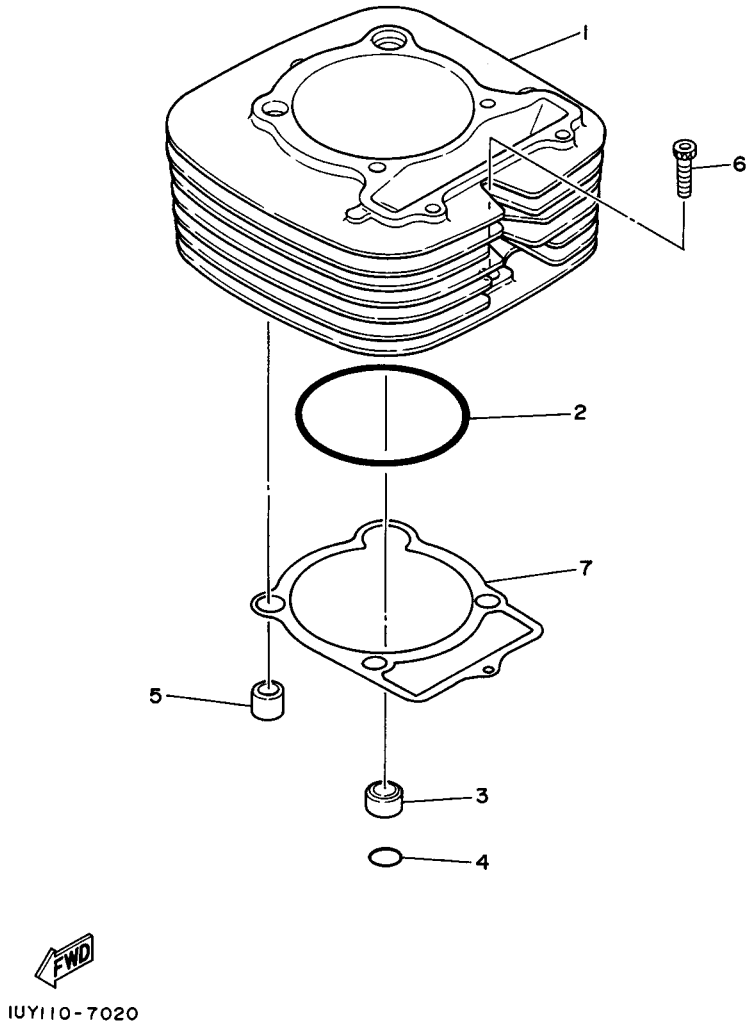

FIG. 2 CYLINDER

REF. NO.	PART NO.	DESCRIPTION	USA					REMARKS
1	5YT–11310–00	CYLINDER	1					
2	93210–86509	O-RING	1					
3	90387–16547	COLLAR	1					
4	93210–18322	O-RING	1					
5	99530–14016	PIN, DOWEL	1					
6	91312–06030	BOLT	1					
7	4KB–11351–00	GASKET, CYLINDER	1					

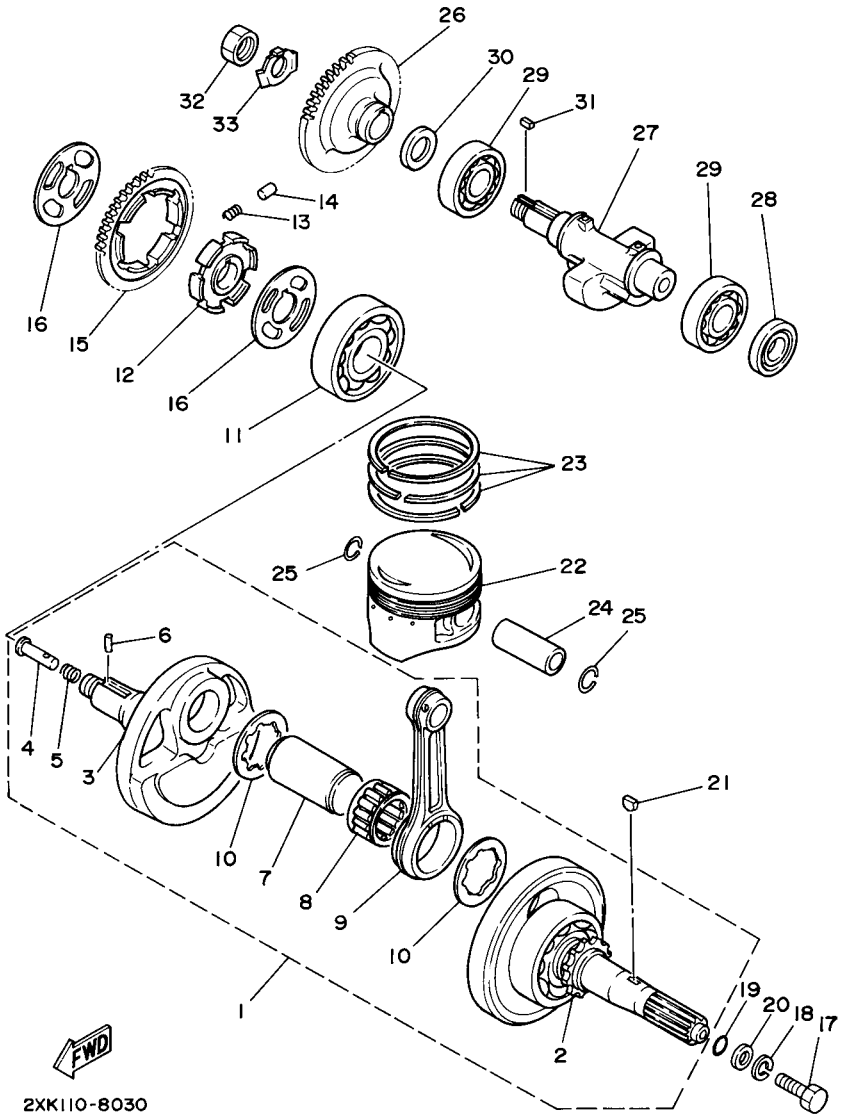

FIG. 3 CRANKSHAFT & PISTON

REF. NO.	PART NO.	DESCRIPTION	USA					REMARKS
1	1UY–11400–00	CRANKSHAFT ASSY	1					
2	1UY–W1141–00	.CRANK SUB ASSY 1	1					
3	1UY–11422–00	.CRANK 2	1					
4	90240–07105	.PIN, CLEVIS	1					
5	90501–07629	.SPRING, COMPRESSION	1					
6	93602–13177	.PIN, DOWEL	1					
7	30X–11681–00	.PIN, CRANK 1	1					
8	93310–633T5	.BEARING	1					
9	1UY–11651–00	.ROD, CONNECTING	1					
10	90209–33253	.WASHER	2					
11	93306–30622	BEARING	1					
12	30X–11496–00	BOSS, BUFFER	1					
13	90501–22721	SPRING, COMPRESSION	6					
14	93605–10090	PIN, DOWEL	3					
15	3Y1–11531–02	GEAR, BALANCE WEIGHT	1					
16	30X–11565–00	WASHER, BEARING COVER	2					
17	90101–10017	BOLT	1					
18	92902–10100	WASHER, SPRING	1					
19	93210–16290	O-RING	1					
20	90201–10058	WASHER, PLATE	1					
21	90280–05048	KEY, WOODRUFF	1					
22	5UH–11631–00–C0	PISTON (STD)	1					
	5UH–11636–00	PISTON (0.50MM O/S)	1					AP
	5UH–11638–00	PISTON (1.00MM O/S)	1					AP
23	4GB–11610–00	PISTON RING SET (STD)	1					
	4GB–11610–20	PISTON RING SET (0.50MM O/S)	1					AP
	4GB–11610–40	PISTON RING SET (1.00MM O/S)	1					AP

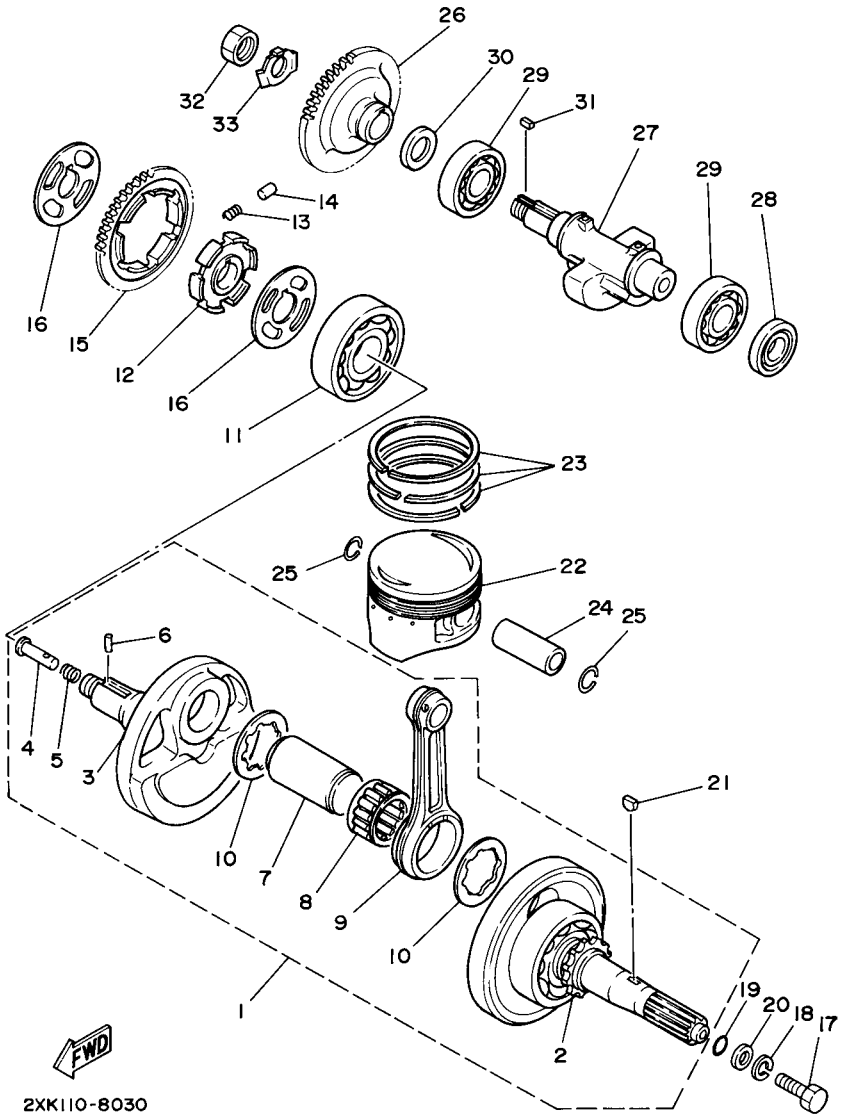

FIG. 3 CRANKSHAFT & PISTON

REF. NO.	PART NO.	DESCRIPTION	USA					REMARKS
24	55V–11633–00	PIN, PISTON	1					
25	93450–19095	CIRCLIP	2					
26	1UY–11536–01	GEAR, DRIVE	1					
27	1UY–11454–00	WEIGHT 1	1					
28	93101–25106	OIL SEAL	1					
29	93306–20532	BEARING	2					
30	90201–207G6	WASHER, PLATE	1					
31	90282–05034	KEY, STRAIGHT	1					
32	90170–16326	NUT	1					
33	90215–16270	WASHER, LOCK	1					

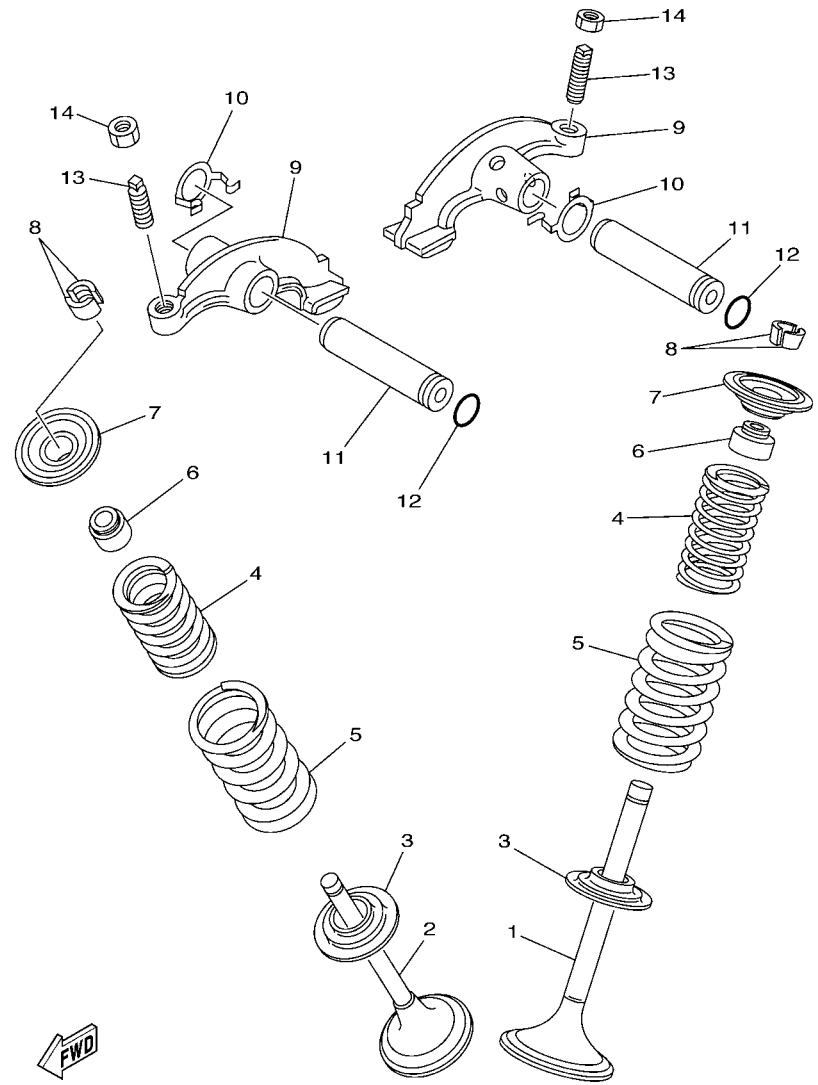

FIG. 4 VALVE

REF. NO.	PART NO.	DESCRIPTION	USA					REMARKS
1	1UY–12111–01	VALVE, INTAKE	1					
2	1UY–12121–01	VALVE, EXHAUST	1					
3	3Y1–12116–00	SEAT, VALVE SPRING	2					
4	1UY–12113–01	SPRING, VALVE INNER	2					
5	1UY–12114–01	SPRING, VALVE OUTER	2					
6	M01–12129–00	SEAL, VALVE STEM	2					
7	3Y1–12117–01	RETAINER, VALVE SPRING	2					
8	1J7–12118–00	COTTER, VALVE	4					
9	3GD–12151–11	ARM, VALVE ROCKER	2					
10	90206–12001	WASHER, WAVE	2					
11	4SH–12156–00	SHAFT, ROCKER 2	2					
12	93210–09165	O-RING	2					
13	31G–12159–02	SCREW, VALVE ADJUSTING	2					
14	31G–12158–00	NUT, LOCK	2					

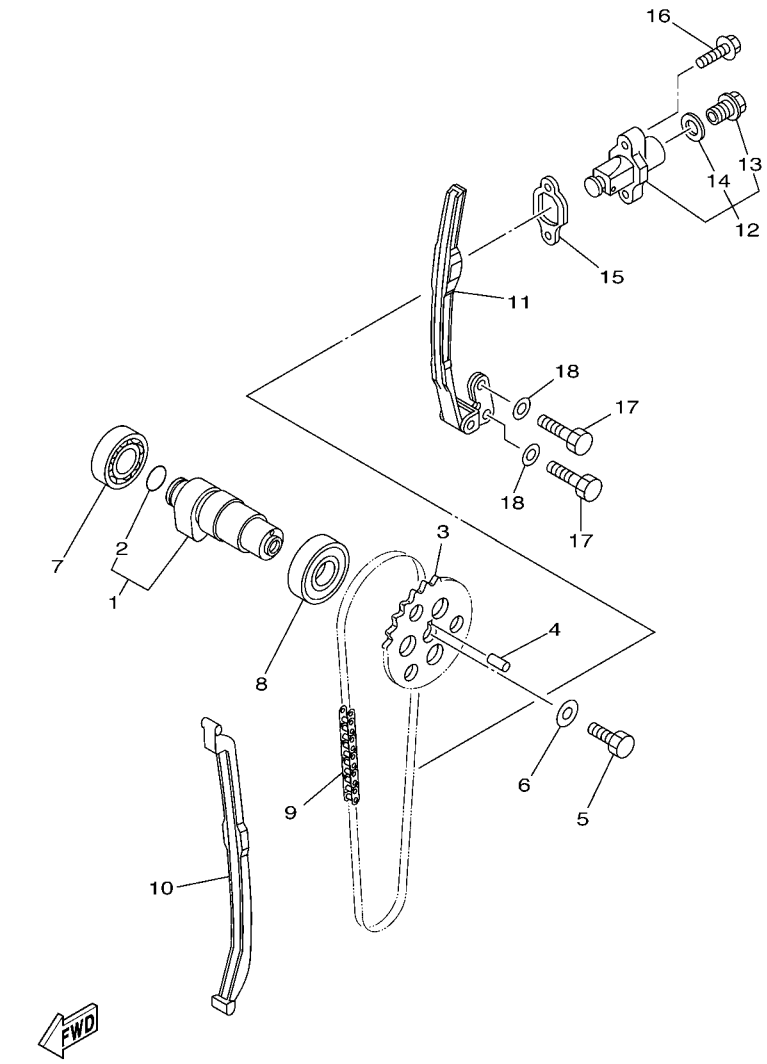

5YTG100-F050

FIG. 5 CAMSHAFT & CHAIN

REF. NO.	PART NO.	DESCRIPTION	USA					REMARKS
1	5UH–12170–10	CAMSHAFT ASSY 1	1					
2	93210–17003	.O-RING	1					
3	5YT–12176–00	SPROCKET, CAM CHAIN	1					
4	93604–10011	PIN, DOWEL	1					
5	90101–10016	BOLT	1					
6	90201–10591	WASHER, PLATE	1					
7	93306–00438	BEARING	1					NIHONSEIKO
8	93306–00502	BEARING	1					
9	94500–02090	CHAIN (BF05M 90L)	1					
10	3Y1–12231–01	GUIDE, STOPPER 1	1					
11	1UY–12241–00	GUIDE, STOPPER 2	1					
12	31G–12210–01	TENSIONER ASSY, CAM CHAIN	1					
13	31G–12222–00	.PLUG	1					
14	31G–12214–00	.GASKET	1					
15	3GD–12213–00	GASKET, TENSIONER CASE	1					
16	95022–06025	BOLT, FLANGE	2					
17	97022–06016	BOLT	2					
18	92902–06600	WASHER, PLATE	2					

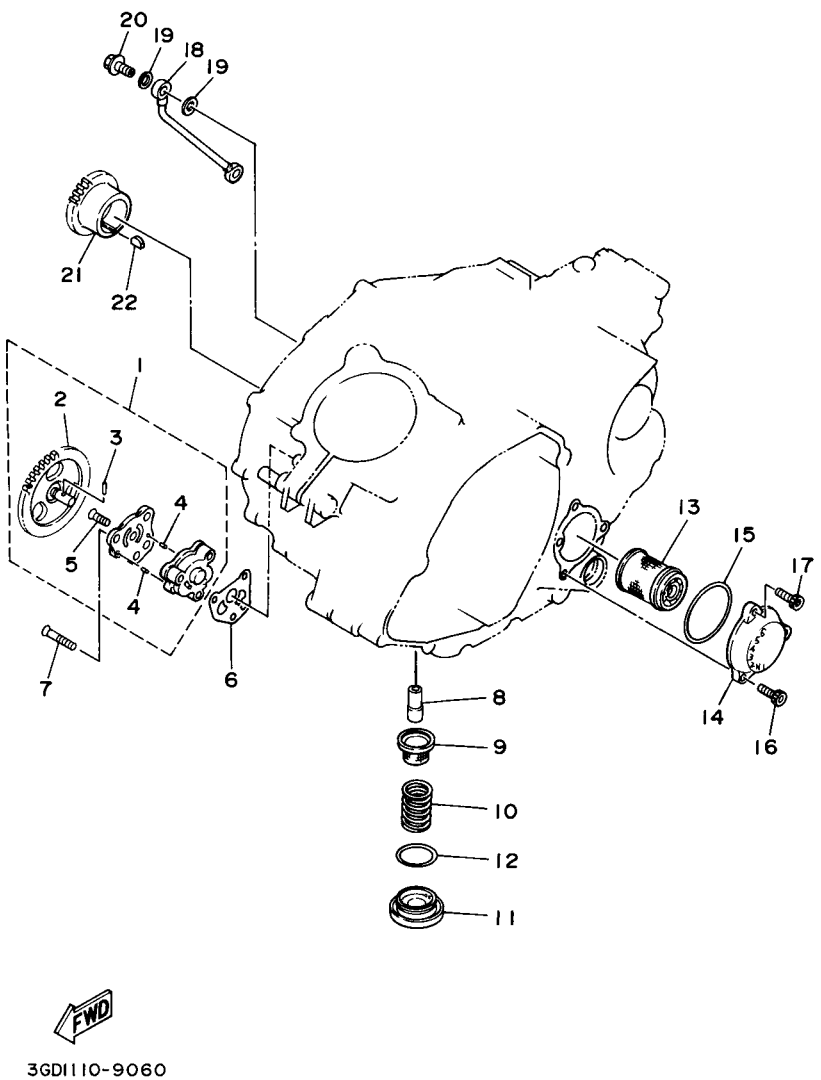

FIG. 6 OIL PUMP

REF. NO.	PART NO.	DESCRIPTION	USA					REMARKS
1	1UY–13300–00	OIL PUMP ASSY	1					
2	1UY–13326–00	.GEAR, PUMP DRIVEN 2	1					
3	93603–12030	.PIN, DOWEL	1					
4	93603–07073	.PIN, DOWEL	2					
5	90151–06010	.SCREW, COUNTERSUNK	1					
6	3GD–13329–00	GASKET, PUMP COVER	1					
7	98702–06030	SCREW, FLAT HEAD	3					
8	2XK–13416–00	PIPE, OIL 1	1					
9	51Y–13411–00	STRAINER, OIL	1					
10	90501–18576	SPRING, COMPRESSION	1					
11	30X–15351–00	PLUG, DRAIN	1					
12	93210–35520	O-RING	1					
13	1UY–13440–02	ELEMENT ASSY, OIL CLEANER	1					
14	3GD–13447–00	COVER, OIL ELEMENT	1					
15	93210–54175	O-RING	1					
16	91312–06020	BOLT	2					
17	90110–06189	BOLT, HEXAGON SOCKET HEAD	1					
18	1UY–13161–01	PIPE, DELIVERY 1	1					
19	90430–08119	GASKET	4					
20	90401–08004	BOLT, UNION	2					
21	1UY–13324–00	GEAR, PUMP DRIVE	1					
22	90280–05013	KEY, WOODRUFF	1					

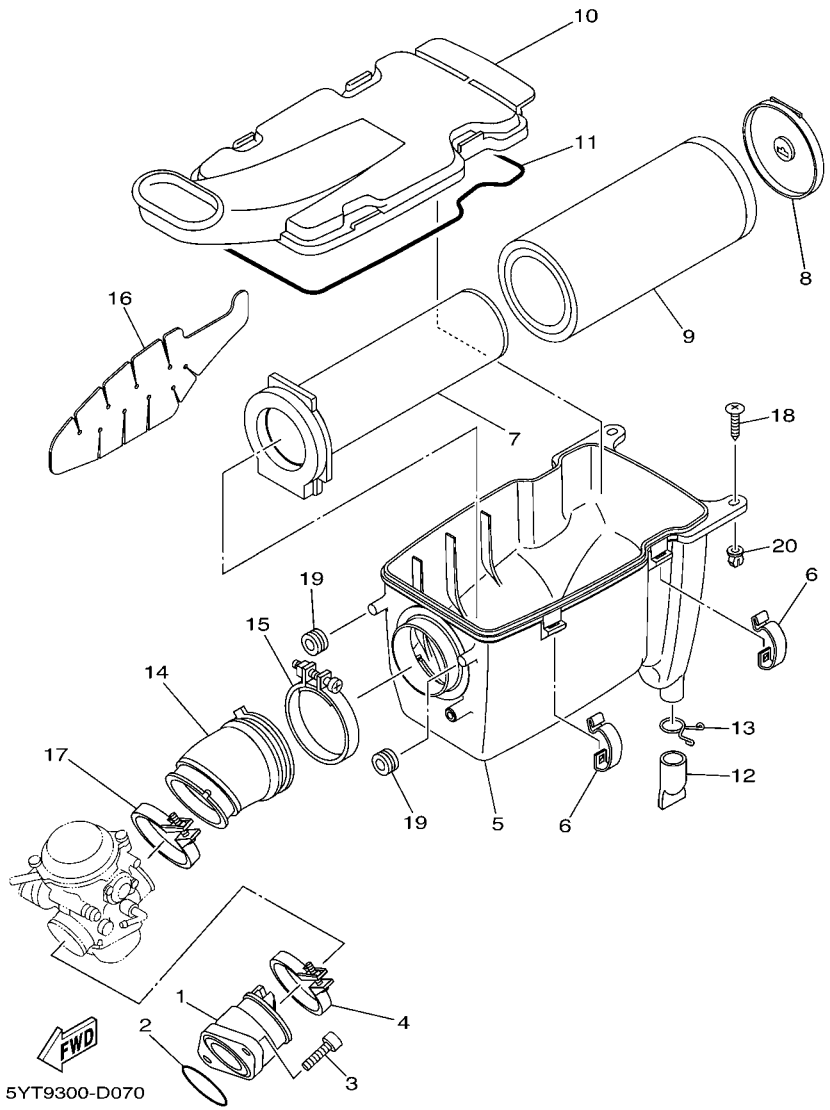

FIG. 7 INTAKE

REF. NO.	PART NO.	DESCRIPTION	USA					REMARKS
1	5YT–13586–00	JOINT, CARBURETOR 1	1					
2	93210–44545	O-RING	1					
3	91312–08025	BOLT	2					
4	90450–52003	HOSE CLAMP ASSY	1					
5	5YT–14411–00	CASE, AIR CLEANER 1	1					
6	5GH–14436–00	HOOK	4					
7	1UY–14458–01	GUIDE	1					
8	1UY–14468–00	PLATE,ELEMENT FITTING	1					
9	1UY–14451–00	ELEMENT, AIR CLEANER	1					
10	5YT–14412–01	CAP, CLEANER CASE 1	1					
11	4FU–14452–00	SEAL	1					
12	59V–14457–00	SEAL	1					
13	90467–220A1	CLIP	1					
14	5YT–14453–00	JOINT, AIR CLEANER 1	1					
15	90460–75020	CLAMP, HOSE	1					
16	5YT–1442F–00	PROTECTOR	1					
17	90450–63004	HOSE CLAMP ASSY	1					
18	97702–60025	SCREW, TAPPING	2					
19	90480–15005	GROMMET	2					
20	90338–08226	PLUG	2					

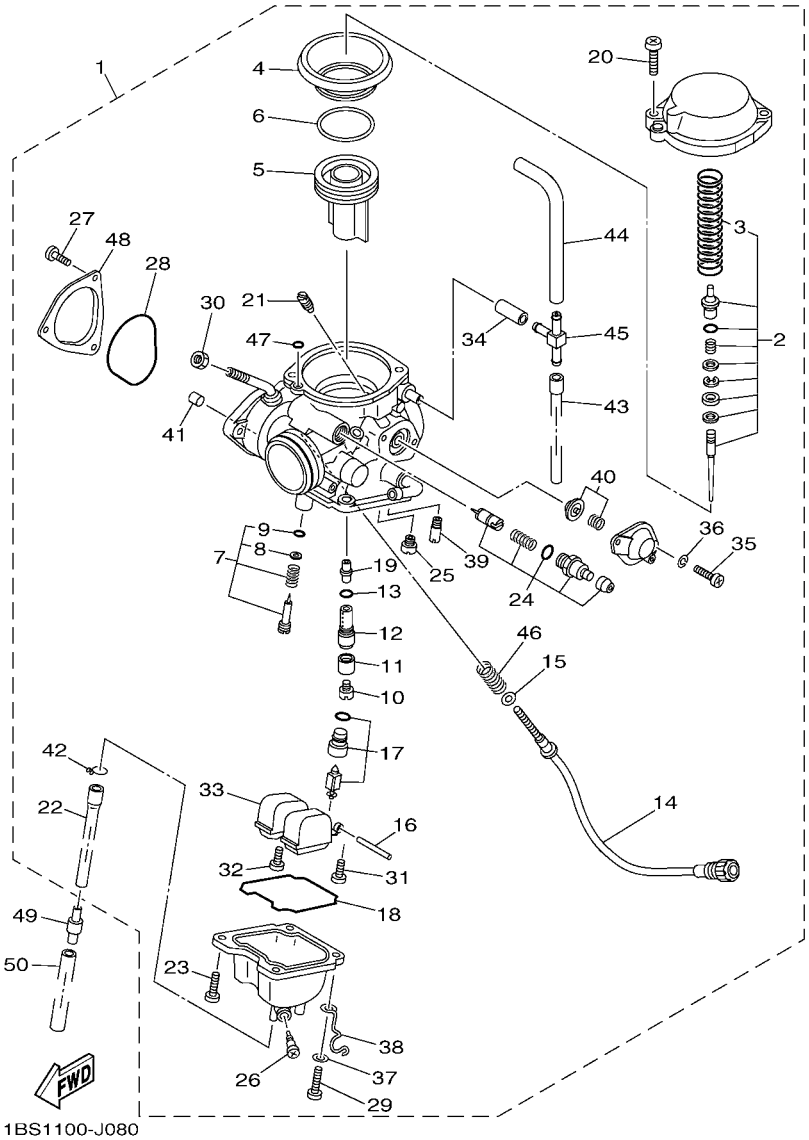

FIG. 8 CARBURETOR

REF. NO.	PART NO.	DESCRIPTION	USA					REMARKS
1	5YT–14901–10	CARBURETOR ASSY 1	1					
2	5YT–1490J–10	.NEEDLE SET	1					
3	5YT–24423–00	..SPRING, DIAPHRAGM	1					
4	8FA–14940–00	.DIAPHRAGM ASSY	1					
5	5YT–14112–00	.VALVE, THROTTLE 1	1					
6	5YT–14194–00	.RING	1					
7	5MP–14105–00	.PILOT SCREW SET	1					
8	3H1–14962–00	..WASHER	1					
9	3H1–14147–00	..O-RING	1					
10	3G2–1423A–79	.JET, MAIN (#142.5)	1					
11	5GH–14918–00	.RING	1					
12	5YT–14261–00	.HOLDER	1					
13	583–14561–00	.O-RING	1					
14	5YT–14123–00	.SCREW, AIR ADJUSTING	1					
15	5FU–14962–00	.WASHER	1					
16	127–14186–00	.PIN, FLOAT	1					
17	5YT–14190–25	.NEEDLE VALVE ASSY	1					
18	5DM–14561–00	.O-RING	1					
19	5YT–14141–40	.NOZZLE, MAIN	1					
20	4KM–14216–00	.SCREW	2					
21	1HX–14231–33	.JET, MAIN (#165)	1					
22	5YT–14193–00	.PIPE	1					
23	98507–04010	.SCREW, PAN HEAD	3					
24	5YT–1410A–00	.STARTER SET	1					
25	3G2–14231–14	.JET,PILOT AIR(#70)	1					
26	5LW–14191–00	.PLUG, DRAIN	1					
27	98507–04006	.SCREW, PAN HEAD	3					

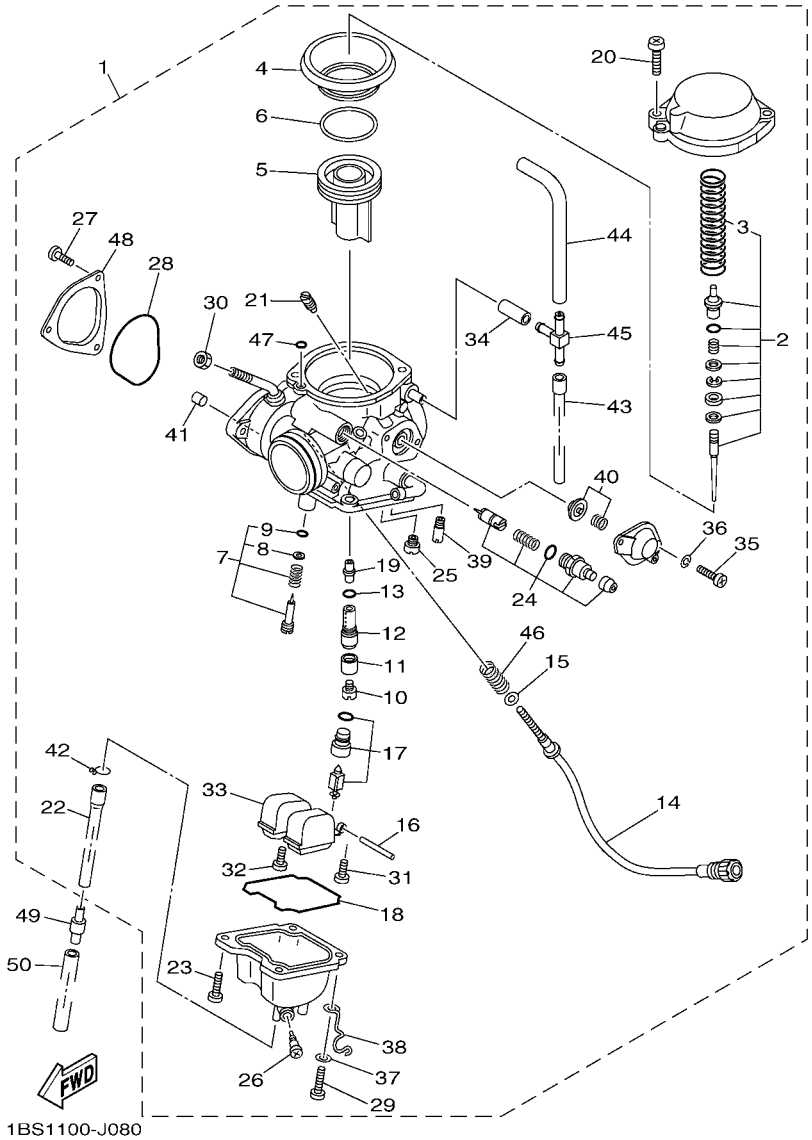

FIG. 8 CARBURETOR

REF. NO.	PART NO.	DESCRIPTION	USA					REMARKS
28	5LP–14147–00	.O-RING	1					
29	98507–04012	.SCREW, PAN HEAD	1					
30	522–14161–00	.NUT, CABLE ADJUSTING	1					
31	98507–04008	.SCREW, PAN HEAD	1					
32	1FN–14565–00	.SCREW	1					
33	5DM–14985–00	.FLOAT	1					
34	5YT–14197–00	.PIPE	1					
35	98501–04014	.SCREW, PAN HEAD	2					
36	92902–04100	.WASHER, SPRING	2					
37	92907–04600	.WASHER	1					
38	5KM–14937–00	.CLIP	1					
39	4KM–14142–22	.JET, PILOT (# 22.5)	1					
40	5YT–1490H–00	.DIAPHRAGM SET 5	1					
41	3GD–14155–00	.GUIDE, CABLE	1					
42	80N–14139–00	.CLIP, PIPE	1					
43	5YT–14197–20	.PIPE	1					
44	5YT–14197–10	.PIPE	1					
45	28V–14988–00	.PIPE, STARTER CONNECTING	1					
46	137–14133–00	.SPRING, THROTTLE STOP	1					
47	354–14147–00	.O-RING	1					
48	4WV–14293–00	.COVER 1	1					
49	24W–14193–00	PIPE	1					
50	91A20–07010	TUBE, FLEXIBLE VINYL	1					

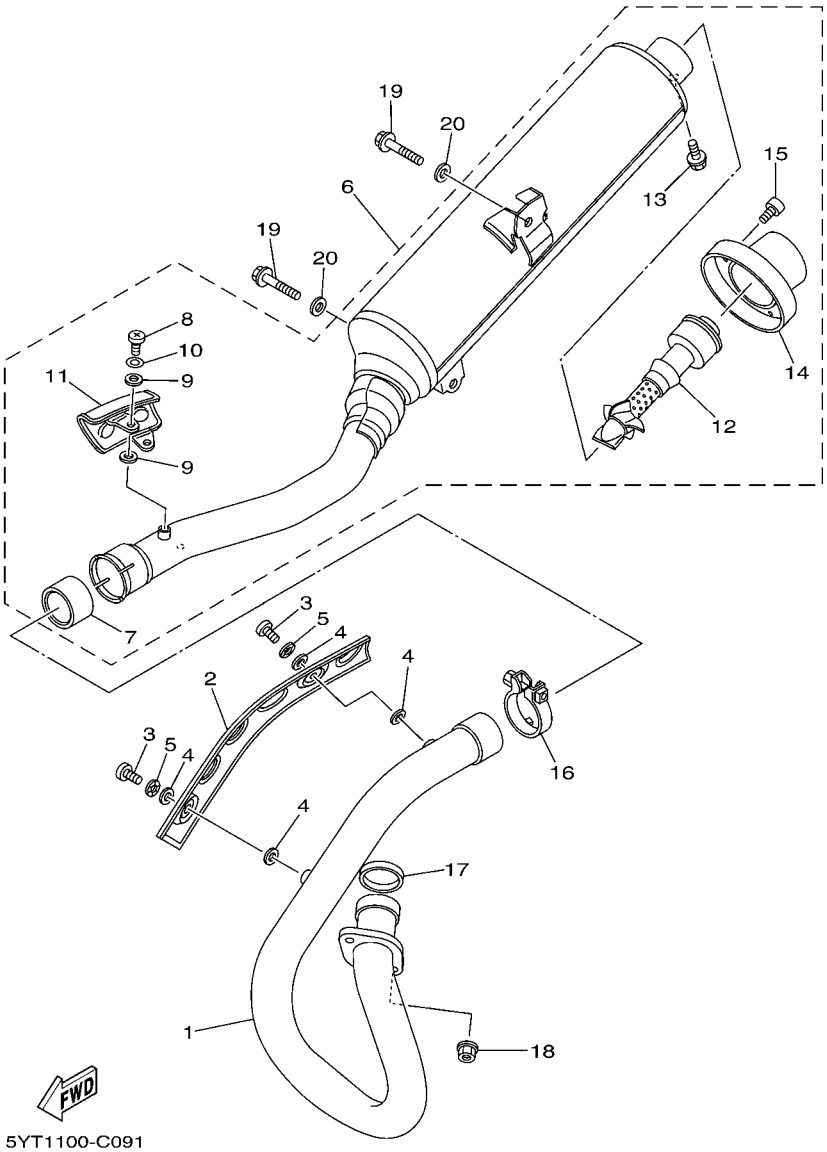

FIG. 9 EXHAUST

REF. NO.	PART NO.	DESCRIPTION	USA					REMARKS
1	1UY–14611–02	PIPE, EXHAUST 1	1					
2	5YT–14628–00	PROTECTOR, EXHAUST PIPE	1					
3	98902–06010	SCREW, BIND	2					
4	90201–05015	WASHER, PLATE	4					
5	92902–06200	WASHER	2					
6	5YT–14710–00	MUFFLER ASSY 1	1					
7	4WM–14755–00	.GASKET, SILENCER	1					
8	98902–06010	.SCREW, BIND	2					
9	90201–05015	.WASHER, PLATE	4					
10	92902–06200	.WASHER	2					
11	5YT–14708–01	.PROTECTOR ASSY	1					
12	5TG–14752–00	.PIPE, OUTLET	1					
13	95022–06008	.BOLT, FLANGE	1					
14	5YT–14787–00	.CAP, SILENCER	1					
15	90110–06134	.BOLT, HEXAGON SOCKET HEAD	3					
16	5YT–14788–00	BAND, SILENCER	1					
17	3GD–14613–00	GASKET, EXHAUST PIPE	1					
18	90179–06668	NUT	2					
19	95812–08016	BOLT, FLANGE	2					
20	90201–08048	WASHER, PLATE	2					

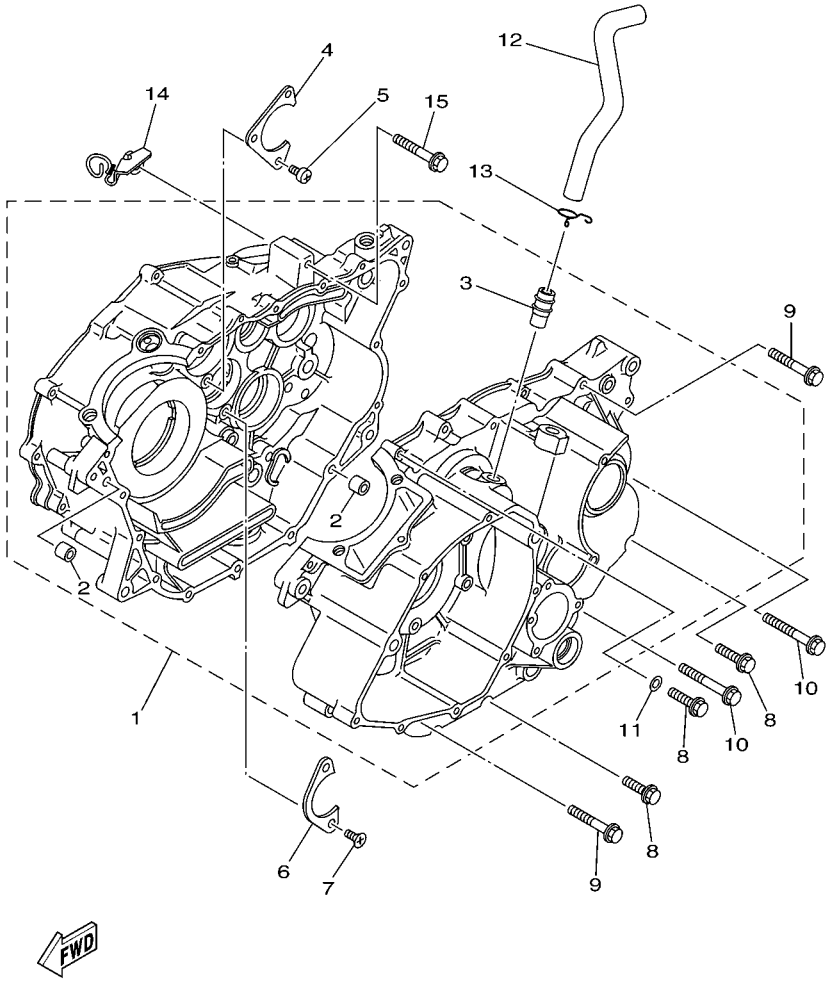

FIG. 10 CRANKCASE

REF. NO.	PART NO.	DESCRIPTION	USA					REMARKS
1	3GD–15100–03	CRANKCASE ASSY	1					
2	99530–12016	.PIN, DOWEL	2					
3	371–11167–01	.PIPE, BREATHER 2	1					
4	3R4–15381–00	PLATE, BEARING COVER	1					
5	98502–06012	SCREW, PAN HEAD	3					
6	1UY–15383–00	PLATE, BEARING COVER	1					
7	98702–06016	SCREW, FLAT HEAD	2					
8	95022–06030	BOLT, FLANGE	8					
9	95022–06050	BOLT, FLANGE	6					
10	95022–06060	BOLT, FLANGE	2					
11	90430–06014	GASKET	1					
12	5YT–11166–00	PIPE, BREATHER 1	1					
13	90467–140A4	CLIP	1					
14	5YT–15441–10	HOLDER, CLUTCH CABLE	1					
15	95802–08045	BOLT, FLANGE	1					

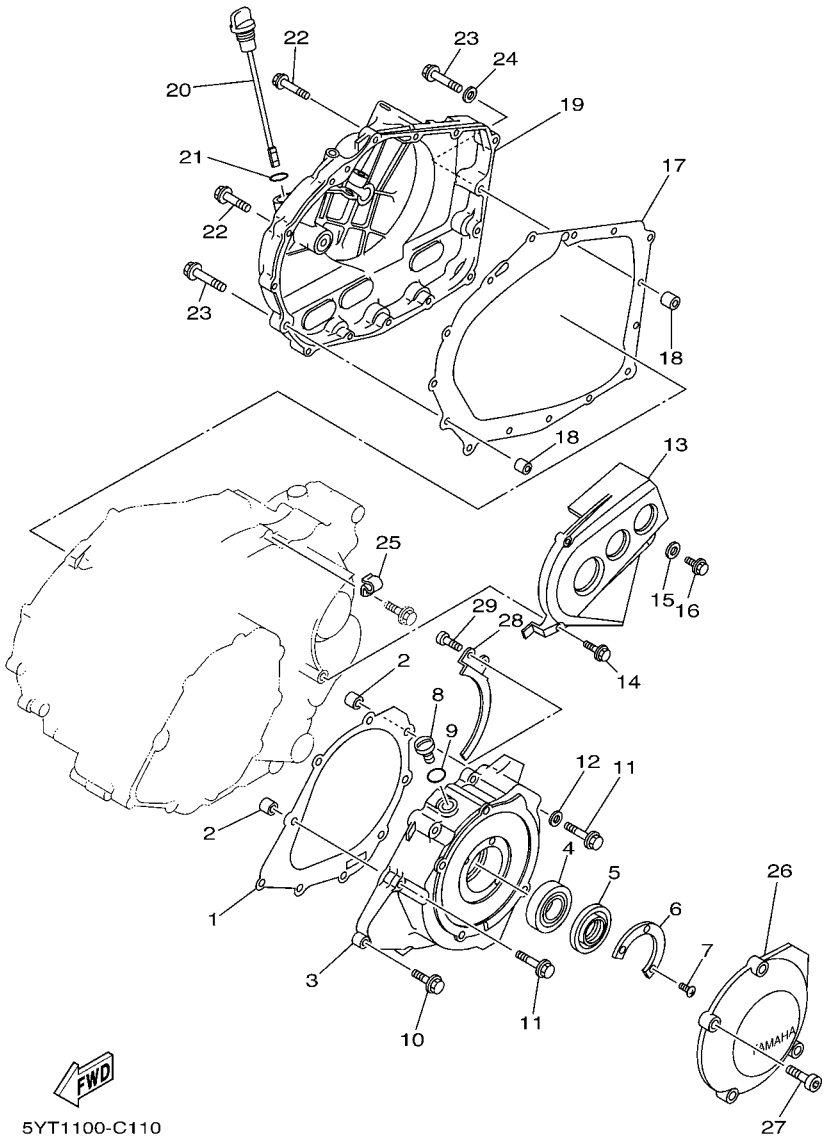

FIG. 11 CRANKCASE COVER 1

REF. NO.	PART NO.	DESCRIPTION	USA					REMARKS
1	3GD–15451–00	GASKET, CRANKCASE COVER 1	1					
2	99530–12016	PIN, DOWEL	2					
3	3GD–15787–03	ADAPTOR	1					
4	93306–07801	BEARING	1					
5	93102–28017	OIL SEAL	1					
6	21V–15719–00	WASHER, THRUST	1					
7	90151–05023	SCREW, COUNTERSUNK	2					
8	90340–14117	PLUG, STRAIGHT SCREW	1					
9	93210–14369	O-RING	1					
10	95022–06025	BOLT, FLANGE	4					
11	95022–06045	BOLT, FLANGE	5					
12	90430–06014	GASKET	1					
13	1UY–15421–00	COVER, CRANKCASE 2	1					
14	95022–06020	BOLT, FLANGE	2					
15	90201–06085	WASHER, PLATE	1					
16	95022–06016	BOLT, FLANGE	1					
17	3GD–15461–00	GASKET, CRANKCASE COVER 2	1					
18	99530–12016	PIN, DOWEL	2					
19	3GD–15431–10	COVER, CRANKCASE 3	1					
20	1UY–15362–01	PLUG, OIL LEVEL	1					
21	93210–19522	O-RING	1					
22	95022–06030	BOLT, FLANGE	13					
23	95022–06040	BOLT, FLANGE	2					
24	90430–06014	GASKET	1					
25	90465–08045	CLAMP	1					
26	3GD–15411–00	COVER, CRANKCASE 1	1					
27	92012–06025	BOLT, BUTTON HEAD	4					

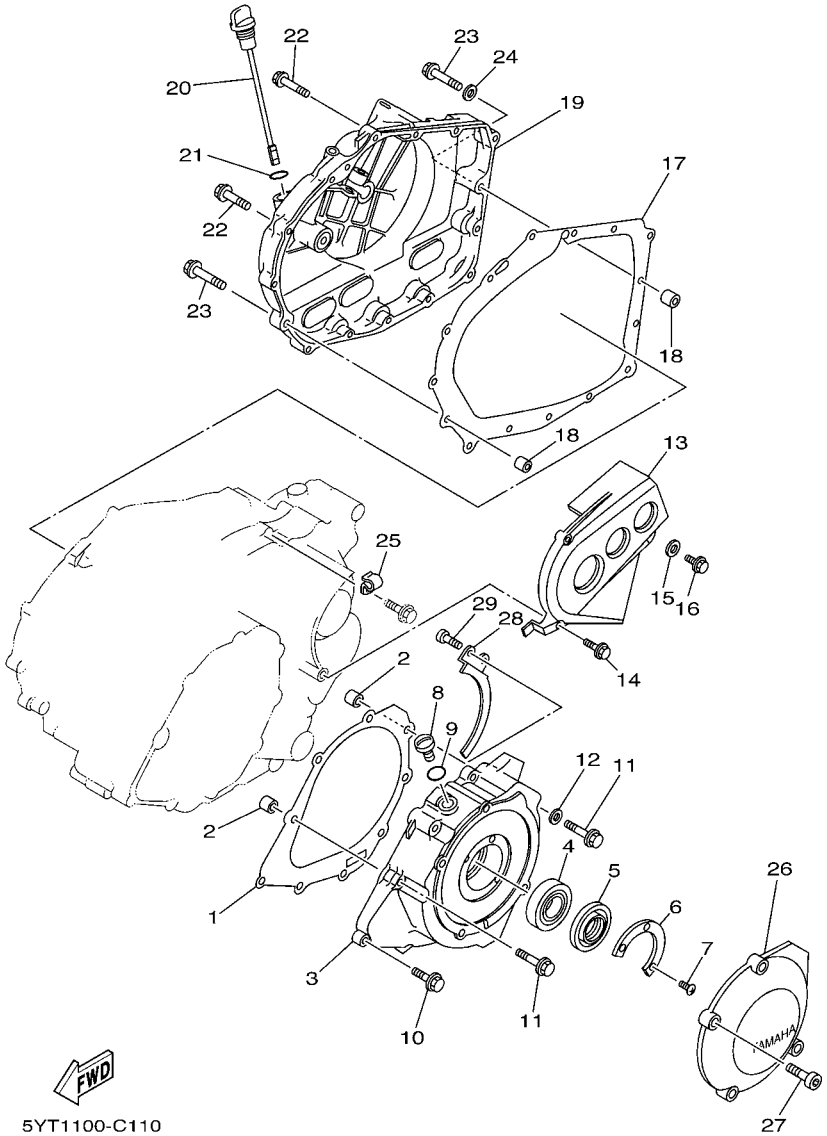

FIG. 11 CRANKCASE COVER 1

REF. NO.	PART NO.	DESCRIPTION	USA					REMARKS
28	1UY–81175–01	STOPPER 1	1					
29	98502–06012	SCREW, PAN HEAD	2					

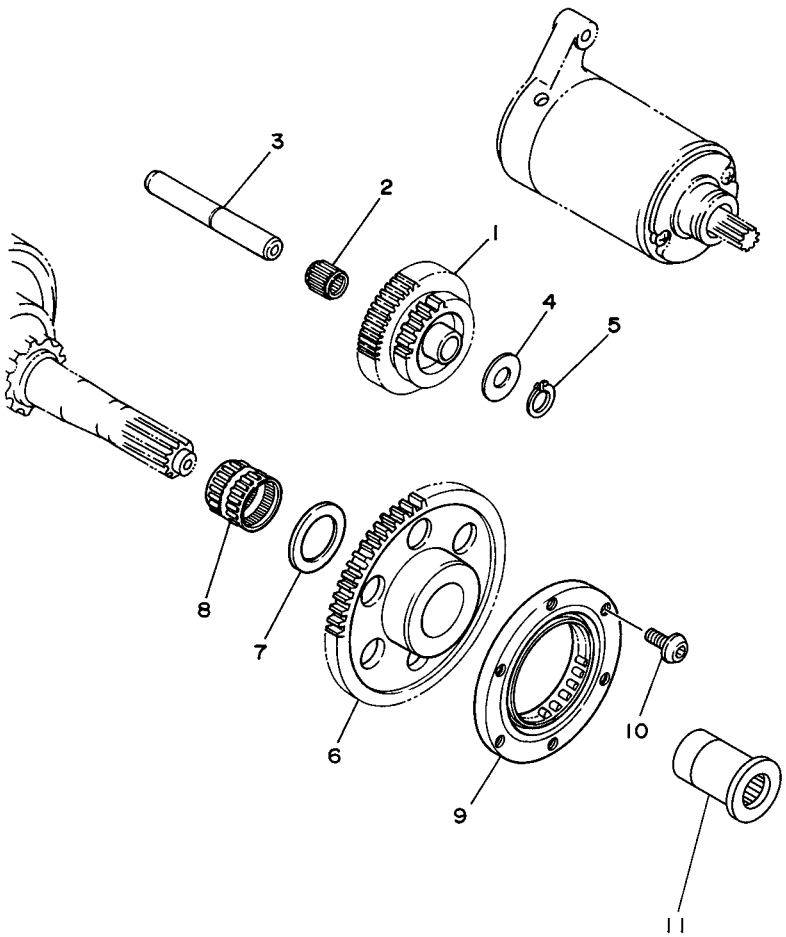

5YT1100-C120

FIG. 12 STARTER CLUTCH

REF. NO.	PART NO.	DESCRIPTION	USA					REMARKS
1	1UY–15512–00	GEAR, IDLER 1	1					
2	93310–212L6	BEARING	2					
3	1UY–15521–02	SHAFT 1	1					
4	90201–123K4	WASHER, PLATE	1					
5	99009–12400	CIRCLIP	1					
6	1UY–15517–01	GEAR, IDLER 2 (65T)	1					
7	90201–25291	WASHER, PLATE	1					
8	93310–225N0	BEARING	1					
9	1UY–15590–01	STARTER ONE-WAY ASSY	1					
10	90149–08031	SCREW	6					
11	3GD–15777–10	BOSS, STARTER PULLEY	1					

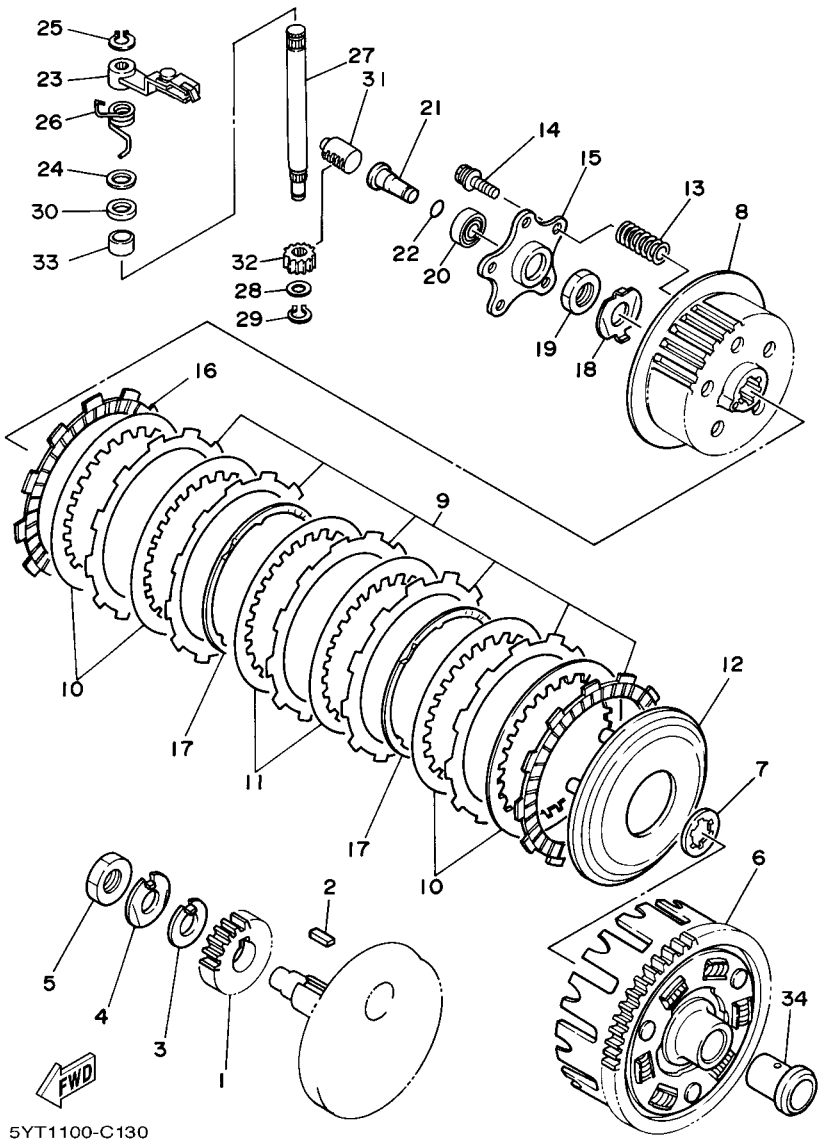

FIG. 13 CLUTCH

REF. NO.	PART NO.	DESCRIPTION	USA					REMARKS
1	1UY–16111–10	GEAR, PRIMARY DRIVE	1					
2	90282–07057	KEY, STRAIGHT	1					
3	90215–16156	WASHER, LOCK	1					
4	90215–16222	WASHER, LOCK	1					
5	90170–16343	NUT	1					
6	2NL–16150–00	PRIMARY DRIVEN GEAR COMP.(76T)	1					
7	30X–16154–00	PLATE, THRUST 1	1					
8	1UY–16371–02	BOSS, CLUTCH	1					
9	5Y1–16331–01	PLATE, FRICTION 2	6					
10	168–16325–00	PLATE, CLUTCH 2 (T=1.6)	4					
11	3J2–16324–00	PLATE, CLUTCH 1 (T=2.0)	2					
12	1UY–16351–00	PLATE, PRESSURE 1	1					
13	90501–231E9	SPRING, COMPRESSION	5					
14	90159–06029	SCREW, WITH WASHER	5					
15	1UY–16352–00	PLATE, PRESSURE 2	1					
16	31A–16321–01	PLATE, FRICTION	1					
17	5Y1–16383–00	SPRING.,CUSHION	2					
18	90215–16258	WASHER, LOCK	1					
19	90170–16326	NUT	1					
20	93306–00006	BEARING	1					
21	1UY–16358–00	PLATE, PUSH	1					
22	93210–06422	O-RING	1					
23	5YT–16340–00	PUSH LEVER ASSY	1					
24	90201–12163	WASHER, PLATE	1					
25	99001–09600	CIRCLIP	1					
26	90508–16022	SPRING, TORSION	1					
27	1UY–16382–00	AXLE, PUSH LEVER	1					

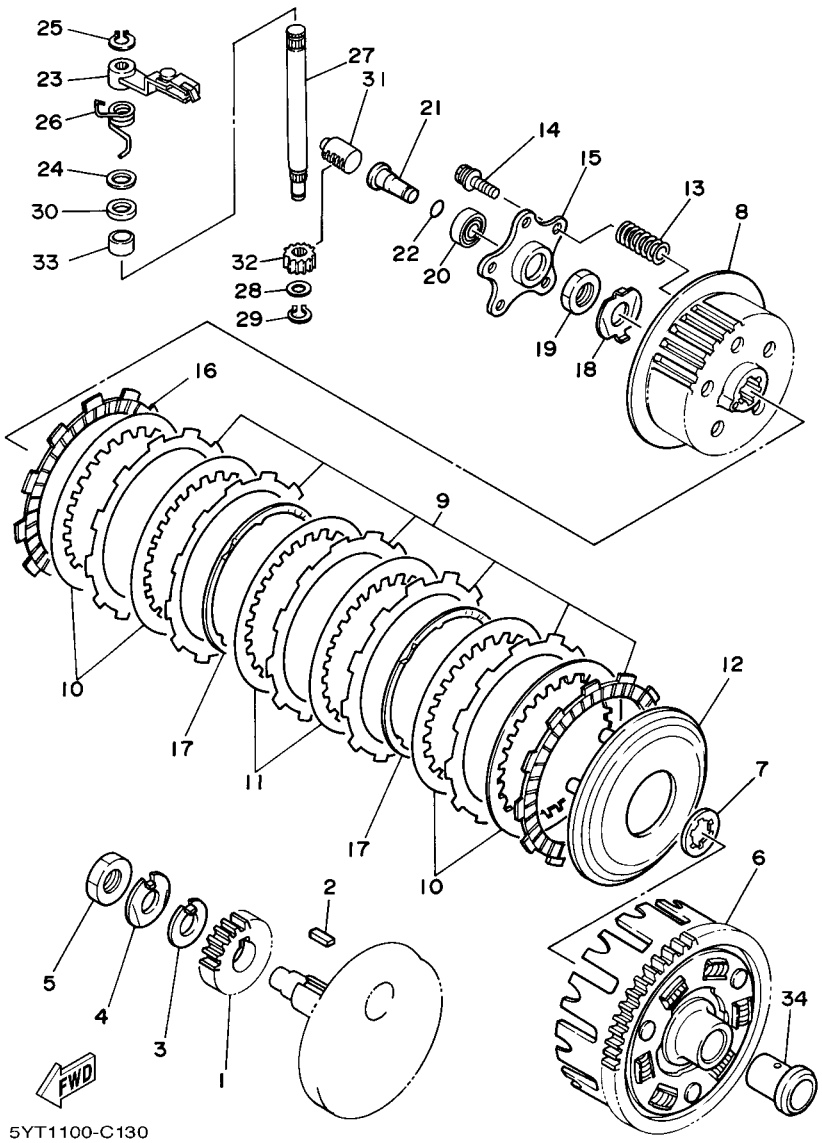

FIG. 13 CLUTCH

REF. NO.	PART NO.	DESCRIPTION	USA					REMARKS
28	90201–08070	WASHER, PLATE	1					
29	99001–07600	CIRCLIP	1					
30	93102–12224	OIL SEAL	1					
31	1UY–16356–00	ROD, PUSH 1	1					
32	3LD–16398–00	PINION, RELEAS	1					
33	90386–12093	BUSH	1					
34	1UY–16181–00	SPACER 1	1					

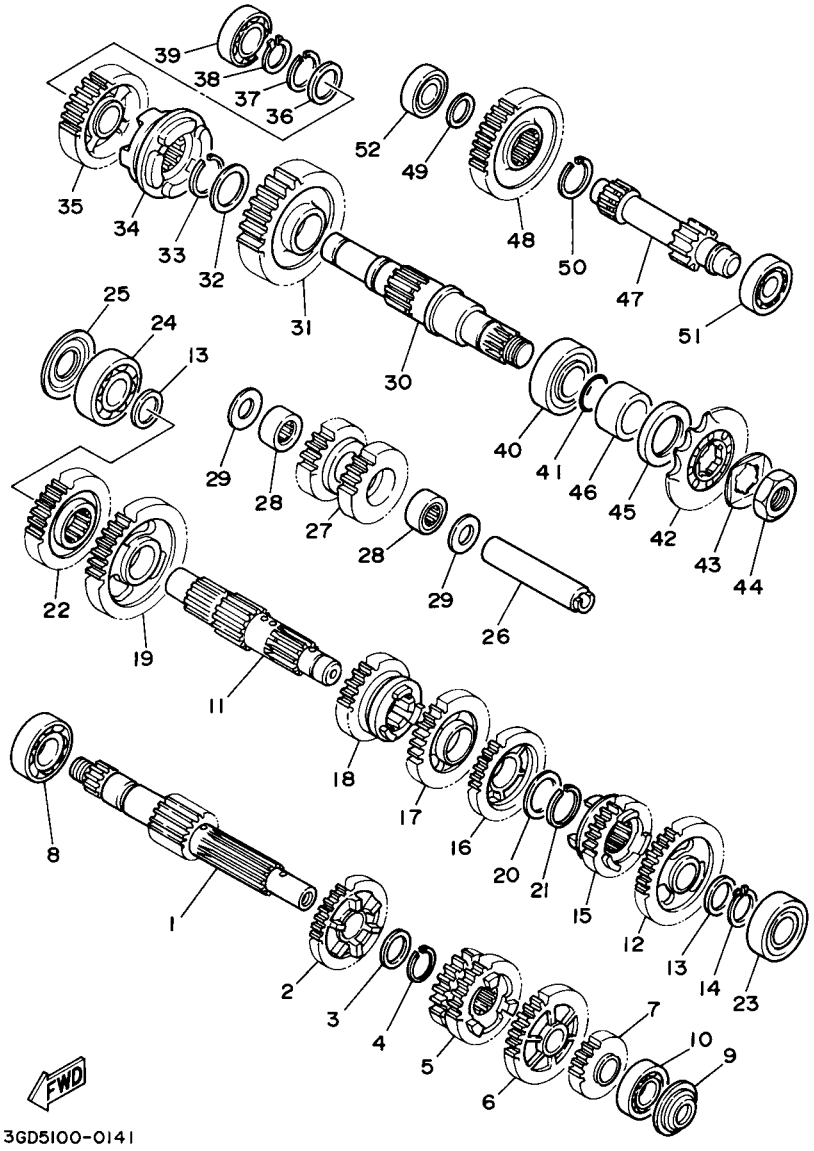

FIG. 14 TRANSMISSION

REF. NO.	PART NO.	DESCRIPTION	USA					REMARKS
1	1UY–17401–01	MAIN AXLE ASSY	1					
2	1UY–17151–00	GEAR, 5TH PINION (28T)	1					
3	90209–18208	WASHER	1					
4	93410–22039	CIRCLIP	1					
5	1UY–17131–00	GEAR, 3RD PINION (23T/26T)	1					
6	1UY–17161–01	GEAR, 6TH PINION (29T)	1					
7	1UY–17121–00	GEAR, 2ND PINION (20T)	1					
8	93306–27202	BEARING	1					
9	93104–17094	OIL SEAL	1					
10	93306–20301	BEARING	1					
11	1UY–17421–02	AXLE, DRIVE	1					
12	5YT–17221–00	GEAR, 2ND WHEEL (33T)	1					
13	90201–203E7	WASHER, PLATE	2					
14	93410–20038	CIRCLIP	1					
15	5YT–17261–00	GEAR, 6TH WHEEL (23T)	1					
16	1UY–17241–00	GEAR, 4TH WHEEL (27T)	1					
17	1UY–17231–01	GEAR, 3RD WHEEL (29T)	1					
18	1UY–17251–00	GEAR, 5TH WHEEL (25T)	1					
19	1UY–17211–00	GEAR, 1ST WHEEL (36T)	1					
20	90201–256E6	WASHER, PLATE (T=0.9)	1					
21	93440–25084	CIRCLIP	1					
22	1UY–17123–00	GEAR, HIGH PINION (27T)	1					
23	93306–20401	BEARING	1					
24	93306–30424	BEARING	1					
25	93104–20068	OIL SEAL	1					
26	1UY–17432–01	AXLE, IDLE	1					
27	1UY–17223–02	GEAR, HIGH WHEEL (18T/20T)	1					

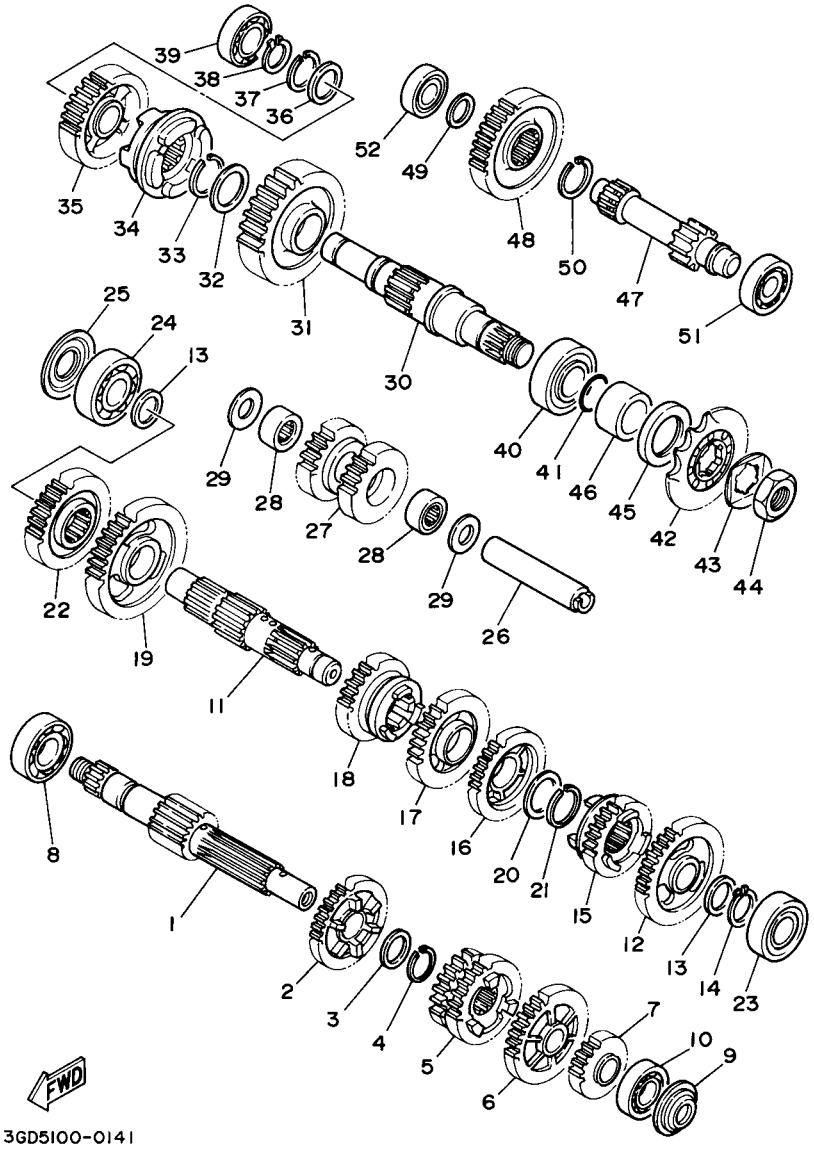

FIG. 14 TRANSMISSION

REF. NO.	PART NO.	DESCRIPTION	USA					REMARKS
28	93311–41587	BEARING	2					
29	90201–150U6	WASHER, PLATE	2					
30	1UY–17523–00	SHAFT	1					
31	1UY–17253–00	GEAR, REVERSE WHEEL 2 (33T)	1					
32	90201–28665	WASHER, PLATE	1					
33	93440–28062	CIRCLIP	1					
34	1UY–17285–00	CLUTCH, DOG	1					
35	1UY–17582–00	GEAR, MIDDLE DRIVE (29T)	1					
36	90201–22793	WASHER, PLATE	1					
37	93410–22039	CIRCLIP	1					
38	93410–20038	CIRCLIP	1					
39	93306–00431	BEARING	1					
40	93306–20501	BEARING	1					
41	93210–22164	O-RING	1					
42	93834–13030	SPROCKET,DRIVE 13T(23X1746130)	1					
43	90215–21239	WASHER, LOCK	1					
44	90179–20255	NUT	1					
45	93102–35393	OIL SEAL	1					
46	90387–257N4	COLLAR	1					
47	1UY–17431–00	AXLE, COUNTER	1					
48	1UY–17243–00	GEAR, REVERSE WHEEL 1 (33T)	1					
49	90201–17255	WASHER, PLATE	1					
50	93440–25084	CIRCLIP	1					
51	93306–20301	BEARING	1					
52	93306–00308	BEARING	1					

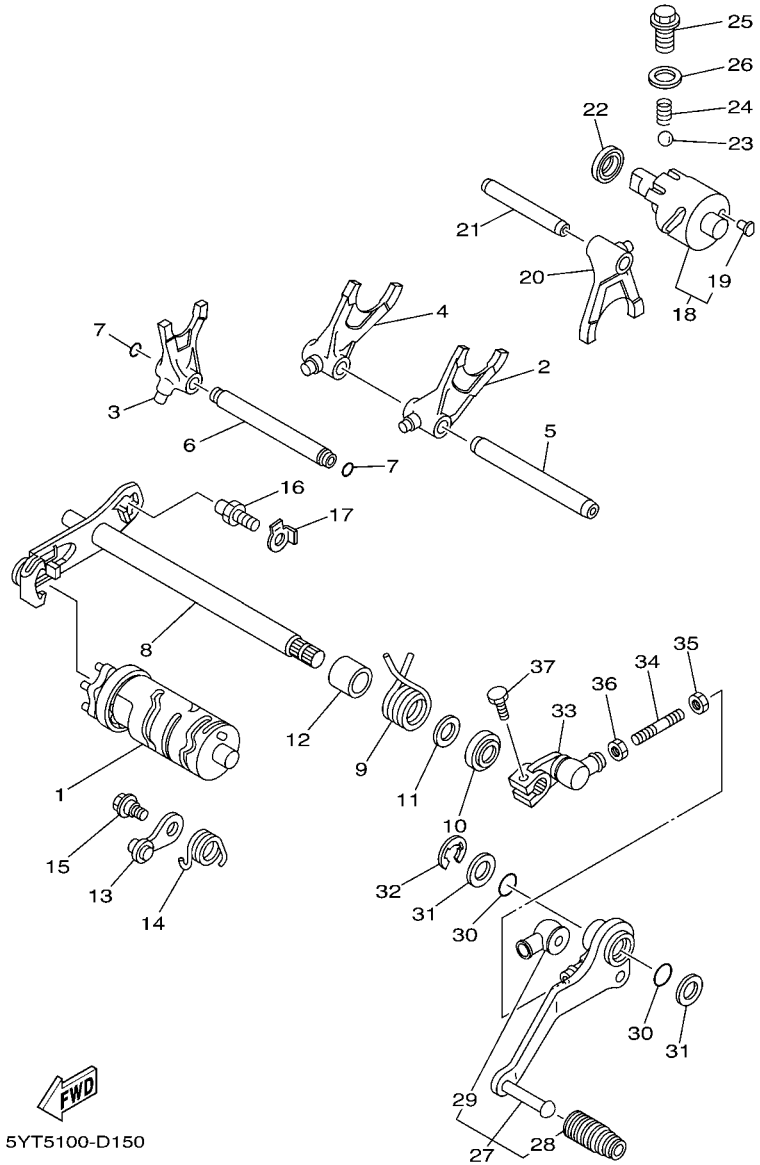

FIG. 15 SHIFT CAM & FORK

REF. NO.	PART NO.	DESCRIPTION	USA					REMARKS
1	5YT–18540–00	SHIFT CAM ASSY	1					
2	1YW–18511–00	FORK, SHIFT 1	1					
3	4GB–18512–00	FORK, SHIFT 2	1					
4	1UY–18513–00	FORK, SHIFT 3	1					
5	22U–18535–00	BAR, SHIFT FORK GUIDE 2	1					
6	4GB–18531–00	BAR, SHIFT FORK GUIDE 1	1					
7	93210–07590	O-RING	2					
8	1UY–18101–01	SHIFT SHAFT ASSY	1					
9	90508–32711	SPRING, TORSION	1					
10	93102–14209	OIL SEAL	1					
11	90201–14691	WASHER, PLATE	1					
12	90560–14284	SPACER	1					
13	1UY–18140–00	STOPPER LEVER ASSY	1					
14	90508–25712	SPRING, TORSION	1					
15	90109–06189	BOLT	1					
16	4G0–18127–00	STOPPER, SCREW	1					
17	90215–08260	WASHER, LOCK	1					
18	3GD–18420–00	SHIFTER ASSY	1					
19	3GH–18542–00	.POINT, NEUTRAL	1					
20	1UY–18311–00	FORK, SHIFT 1	1					
21	2A6–18531–00	BAR, SHIFT FORK GUIDE 1	1					
22	93102–15212	OIL SEAL	1					
23	93503–08007	BALL	1					
24	90501–10353	SPRING, COMPRESSION	1					
25	90105–14003	BOLT, FLANGE	1					
26	90430–14194	GASKET	1					
27	5YT–18110–10	SHIFT PEDAL ASSY	1					

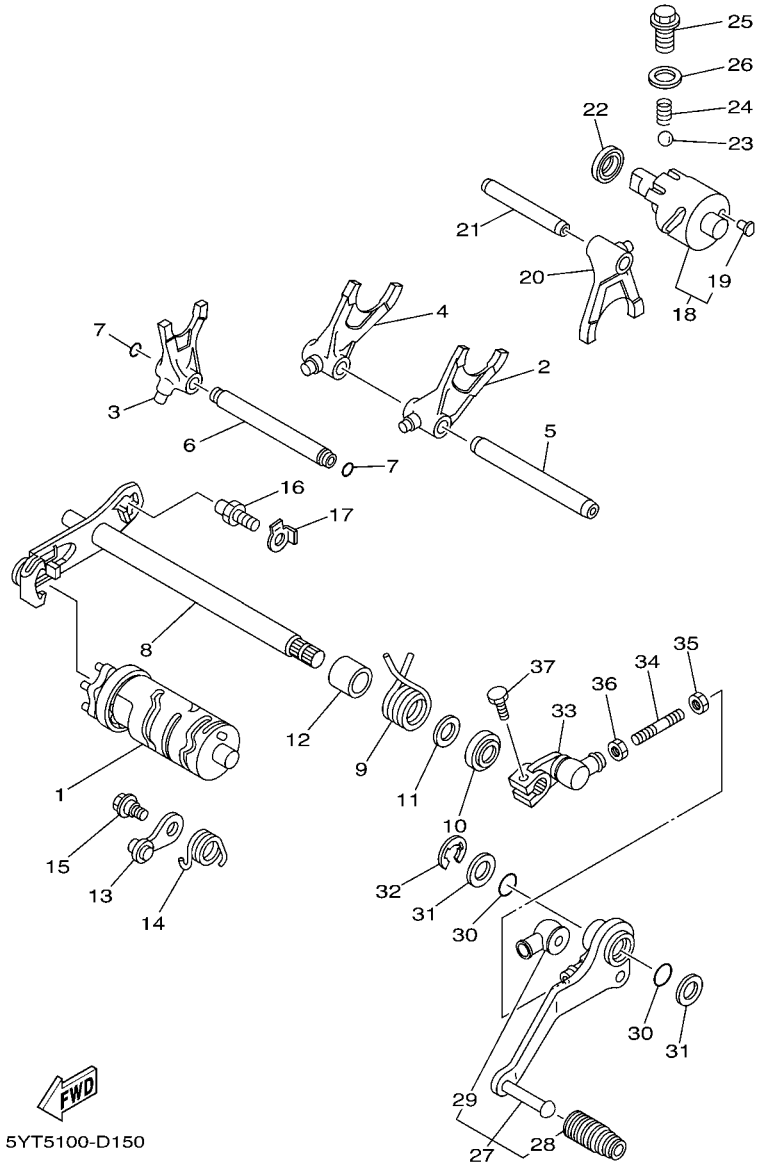

FIG. 15 SHIFT CAM & FORK

REF. NO.	PART NO.	DESCRIPTION	USA					REMARKS
28	5YT–18113–00	.COVER, SHIFT PEDAL	1					
29	2H9–18154–00	.COVER, DUST	1					
30	93210–15414	O-RING	2					
31	90201–15018	WASHER, PLATE	2					
32	93430–12008	CIRCLIP	1					
33	1UY–18112–10	ARM, SHIFT	1					
34	1JN–18115–00	ROD, SHIFT	1					
35	90170–06228	NUT(COUNTER CLOCKWISE)	1					
36	95302–06700	NUT	1					
37	97012–06020	BOLT	1					

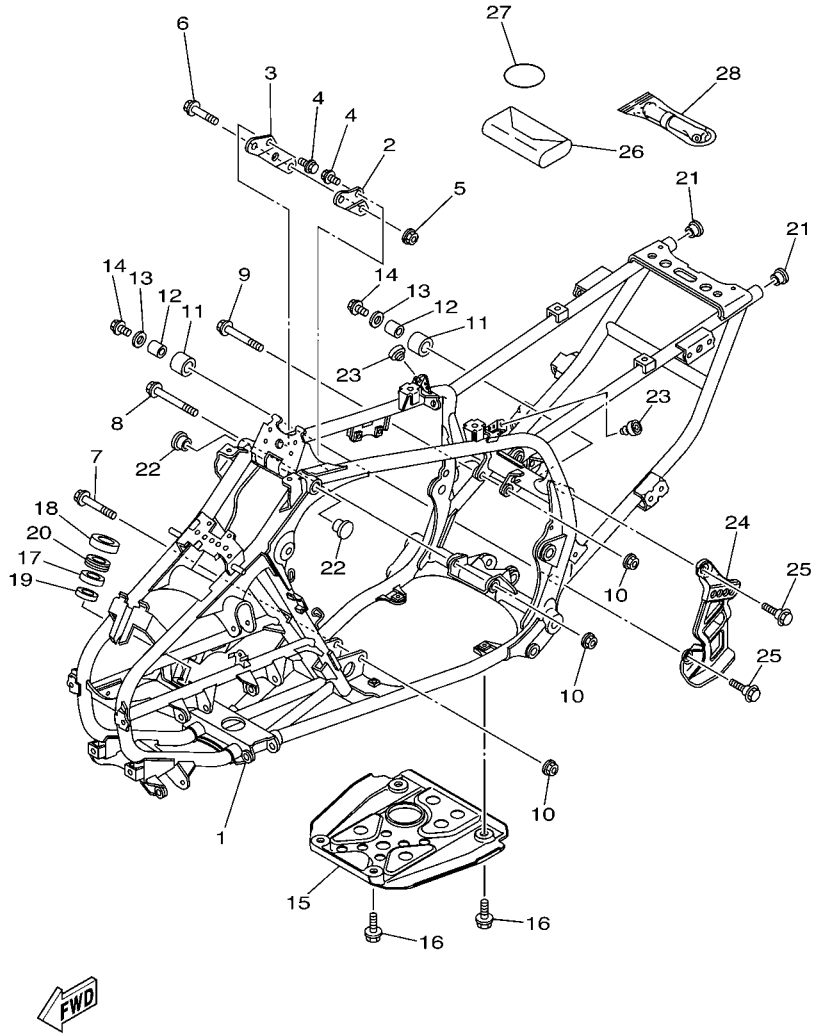

FIG. 16 FRAME

REF. NO.	PART NO.	DESCRIPTION	USA					REMARKS
1	5YT–21110–00	FRAME COMP.	1					
2	1UY–21315–20	STAY, ENGINE 2	1					
3	1UY–21316–20	STAY, ENGINE 3	1					
4	95812–08012	BOLT, FLANGE	4					
5	90185–08017	NUT, SELF-LOCKING	1					
6	95812–08055	BOLT, FLANGE	1					
7	90105–10211	BOLT, FLANGE	1					
8	90105–10277	BOLT, FLANGE	1					
9	90105–10185	BOLT, FLANGE	1					
10	90185–10011	NUT, SELF-LOCKING	3					
11	3TB–22178–00	TENSIONER	2					
12	4V4–22184–00	BUSH	2					
13	90201–08054	WASHER, PLATE	2					
14	95822–08012	BOLT, FLANGE	2					
15	5YT–21471–00	PROTECTOR, ENGINE	1					
16	90109–08100	BOLT	4					
17	93306–20352	BEARING	1					
18	93102–25081	OIL SEAL	1					
19	93102–25099	OIL SEAL	1					
20	2GU–23872–00	HOLDER, BEARING	1					
21	90338–18122	PLUG	2					
22	90338–23172	PLUG	2					
23	22W–24741–00	PAD, SEAT	2					
24	5YT–2117G–00	PROTECTOR	1					
25	90109–08100	BOLT	2					
26	2XK–28100–01	TOOL KIT	1					
27	3TJ–82131–00	BAND, BATTERY	1					

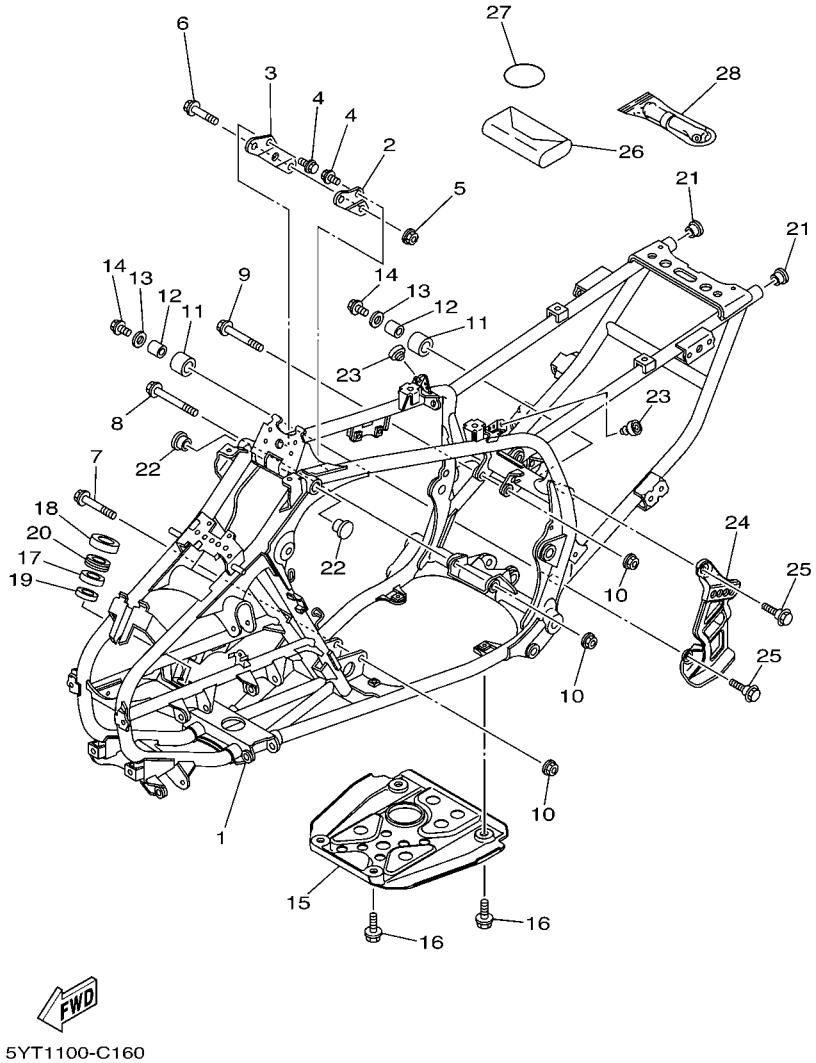

FIG. 16 FRAME

REF. NO.	PART NO.	DESCRIPTION	USA					REMARKS
28	1NV–2811A–01	GAUGE, AIR	1					

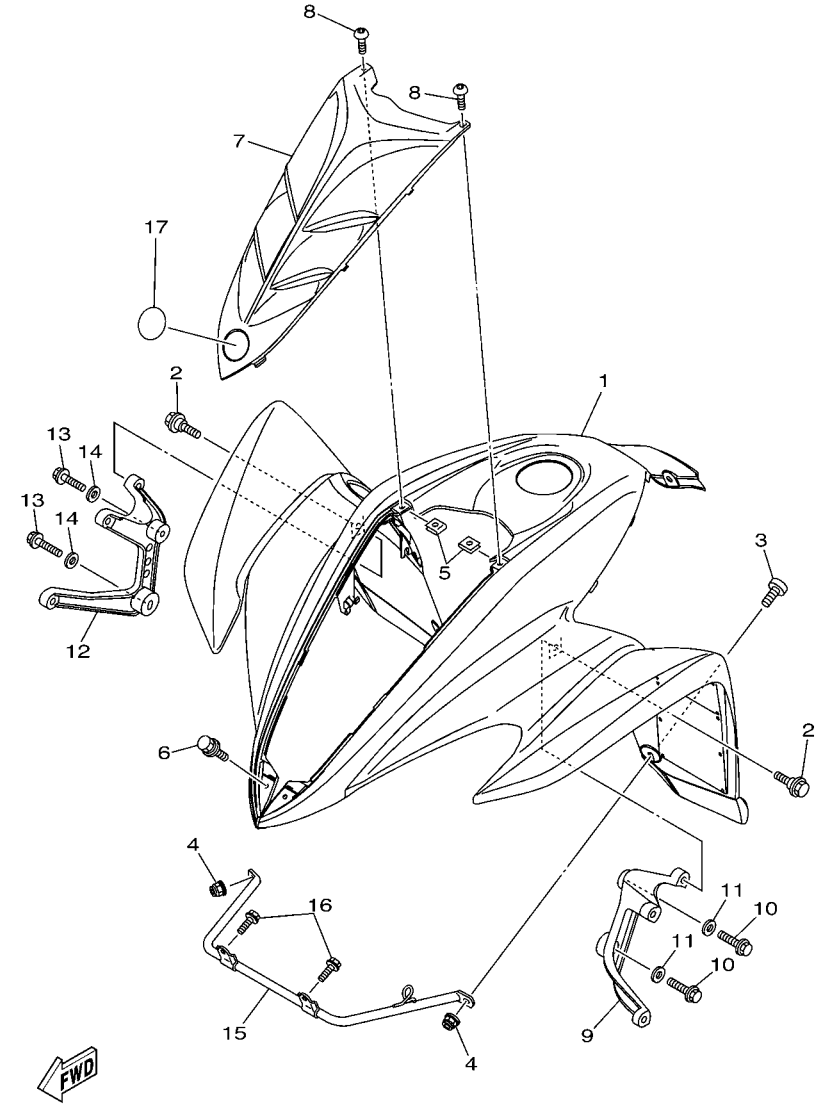

5YT1100-C170

FIG. 17 FRONT FENDER

REF. NO.	PART NO.	DESCRIPTION	USA					REMARKS
1	5YT–W2151–12	FRONT FENDER COMP.	1					
2	90109–06172	BOLT	2					
3	90154–06032	SCREW, BINDING	2					
4	95602–06200	NUT, SELF-LOCKING	2					
5	90183–05008	NUT, SPRING	2					
6	90119–06152	BOLT, WITH WASHER	2					
7	5YT–23391–40	PANEL, FRONT	1					
8	90111–05044	BOLT,HEX. SOCKET BUTTON	2					
9	5YT–21513–00	STAY, FENDER 1	1					
10	95812–06014	BOLT, FLANGE	2					
11	90201–06089	WASHER, PLATE	2					
12	5YT–21514–00	STAY, FENDER 2	1					
13	95812–06014	BOLT, FLANGE	2					
14	90201–06089	WASHER, PLATE	2					
15	5YT–21562–00	STAY, FENDER 3	1					
16	95822–06010	BOLT, FLANGE	2					
17	8AC–2414B–01	EMBLEM	1					

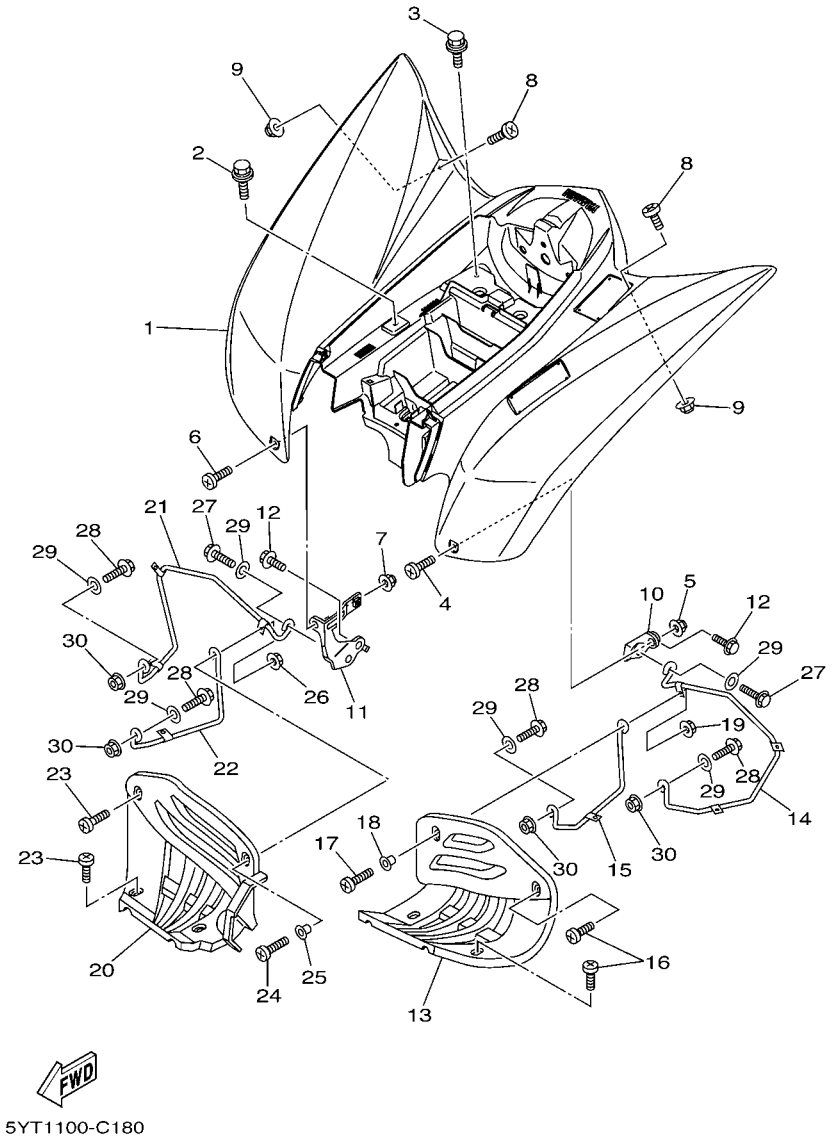

FIG. 18 REAR FENDER

REF. NO.	PART NO.	DESCRIPTION	USA					REMARKS
1	5YT–W2161–11	REAR FENDER COMP.	1					
2	90119–06152	BOLT, WITH WASHER	2					
3	90119–06152	BOLT, WITH WASHER	2					
4	90154–06032	SCREW, BINDING	1					
5	95602–06200	NUT, SELF-LOCKING	1					
6	90154–06032	SCREW, BINDING	1					
7	95602–06200	NUT, SELF-LOCKING	1					
8	90154–06032	SCREW, BINDING	2					
9	95602–06200	NUT, SELF-LOCKING	2					
10	5YT–21613–10	STAY, FENDER 1	1					
11	5YT–21614–10	STAY, FENDER 2	1					
12	95822–08012	BOLT, FLANGE	2					
13	5LP–21621–00	FLAP	1					
14	5YT–2164F–10	STAY 1	1					
15	5YT–2164H–10	STAY 3	1					
16	90154–05043	SCREW, BINDING	3					
17	90154–06031	SCREW, BINDING	1					
18	90387–062E0	COLLAR	1					
19	95602–06200	NUT, SELF-LOCKING	1					
20	5LP–21691–00	FLAP	1					
21	5YT–2164G–10	STAY 2	1					
22	5YT–2164J–10	STAY 4	1					
23	90154–05043	SCREW, BINDING	3					
24	90154–06031	SCREW, BINDING	1					
25	90387–062E0	COLLAR	1					
26	95602–06200	NUT, SELF-LOCKING	1					
27	95822–08020	BOLT, FLANGE	2					

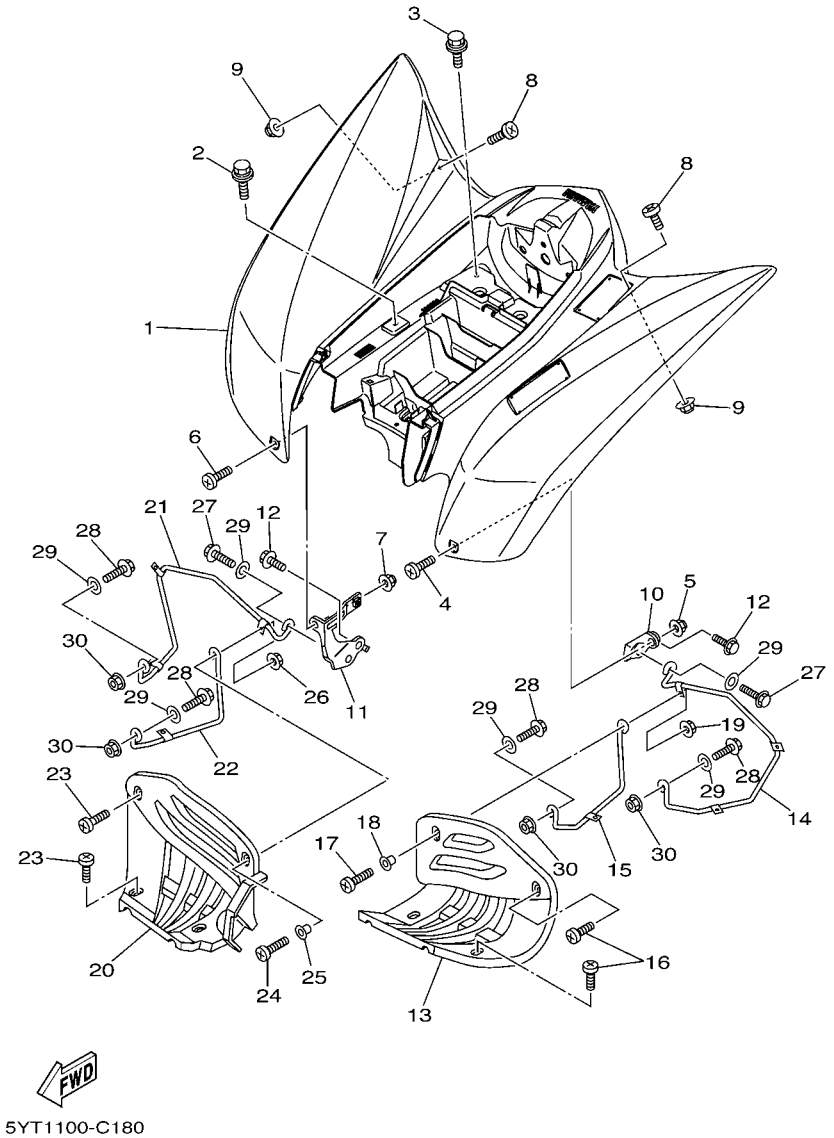

FIG. 18 REAR FENDER

REF. NO.	PART NO.	DESCRIPTION	USA					REMARKS
28	95822–08025	BOLT, FLANGE	4					
29	90201–08048	WASHER, PLATE	6					
30	95602–08200	NUT, SELF-LOCKING	4					

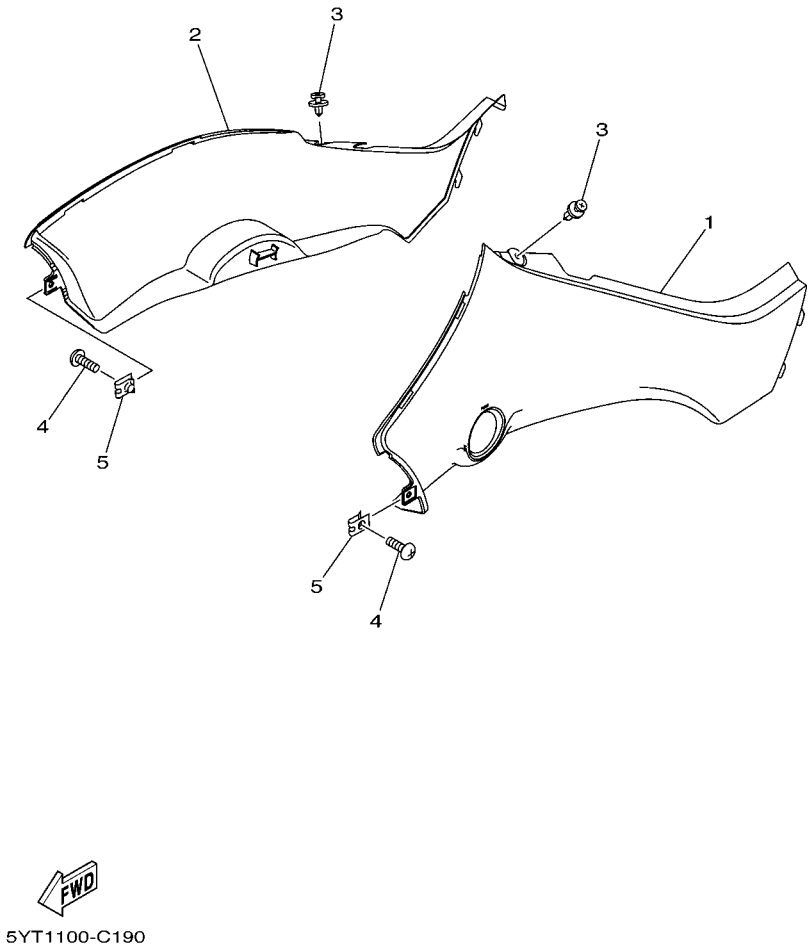

FIG. 19 SIDE COVER

REF. NO.	PART NO.	DESCRIPTION	USA					REMARKS
1	5YT–21711–10	COVER, SIDE 1	1					
2	5YT–21721–10	COVER, SIDE 2	1					
3	90269–07076	RIVET	2					
4	90150–06010	SCREW, ROUND HEAD	2					
5	90183–06069	NUT, SPRING	2					

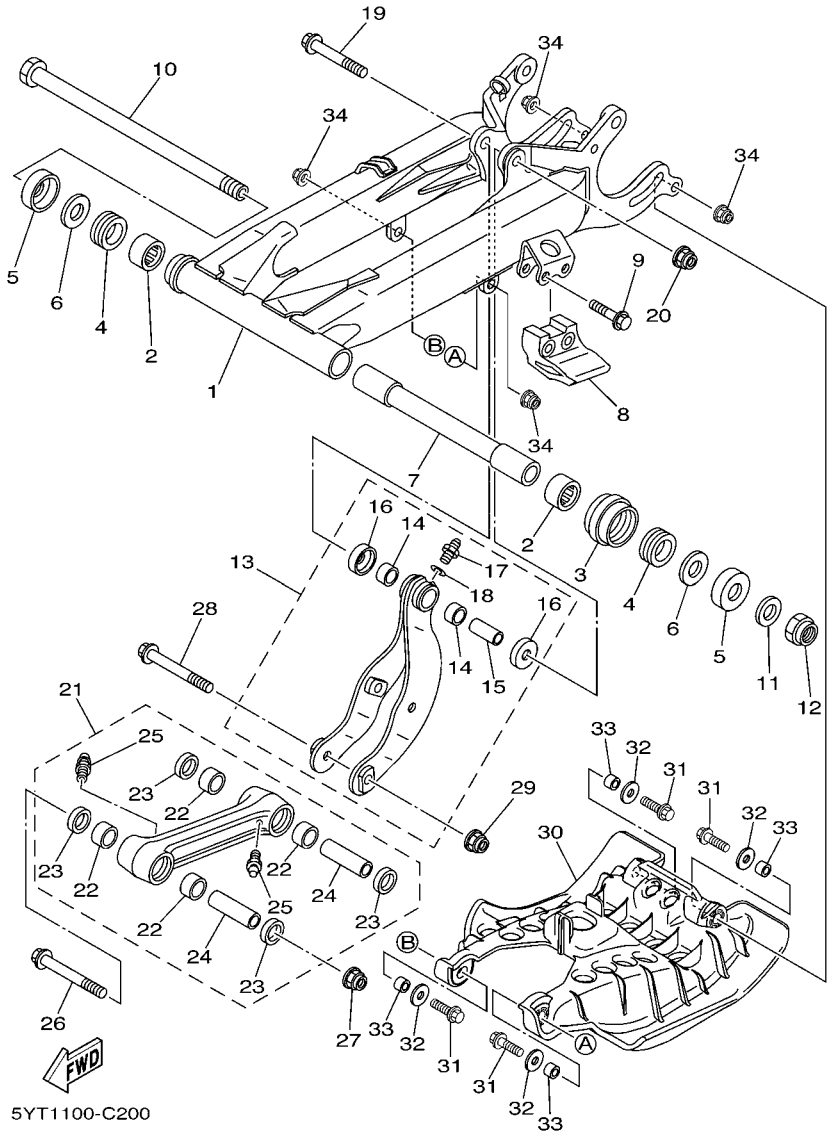

FIG. 20 REAR ARM

REF. NO.	PART NO.	DESCRIPTION	USA					REMARKS
1	3GD–22110–30	REAR ARM COMP.	1					
2	93317–22237	BEARING	2					
3	2GU–22151–00	SEAL, GUARD	1					
4	93108–35004	OIL SEAL (35-41-8)	2					
5	2K6–22128–01	COVER, THRUST 1	2					
6	90201–244A9	WASHER, PLATE (2.05T)	2					
7	3GD–22184–00	BUSH	1					
8	38W–22199–00	SUPPORT, CHAIN	1					
9	95802–08040	BOLT, FLANGE	2					
10	1UY–22141–10	SHAFT, PIVOT	1					
11	90201–16018	WASHER, PLATE	1					
12	90185–16002	NUT, SELF-LOCKING	1					
13	5YT–2210J–00	RELAY ARM SUB ASSY	1					
14	90383–20032	.BUSH, FORMED	2					
15	90387–125N8	.COLLAR	1					
16	5YT–22129–00	.COVER, THRUST 2	2					
17	93700–06004	.NIPPLE, GREASE	1					
18	90201–063F3	.WASHER, PLATE	1					
19	90105–12050	BOLT, FLANGE	1					
20	95602–12200	NUT, SELF-LOCKING	1					
21	5YT–2210K–00	CONNECTING ROD SUB ASSY	1					
22	90383–20032	.BUSH, FORMED	4					
23	93109–20076	.OIL SEAL	4					
24	90387–12021	.COLLAR	2					
25	93700–06004	.NIPPLE, GREASE	2					
26	90105–12061	BOLT, FLANGE	1					
27	95602–12200	NUT, SELF-LOCKING	1					

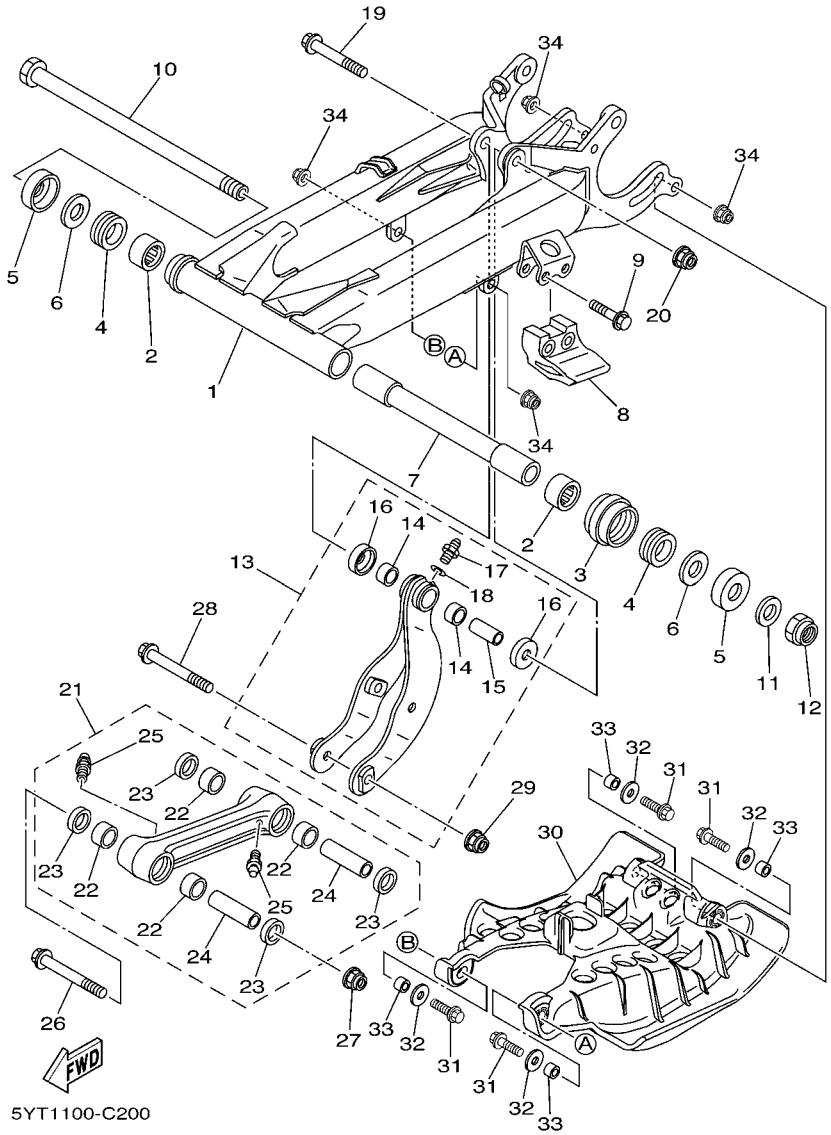

FIG. 20 REAR ARM

REF. NO.	PART NO.	DESCRIPTION	USA					REMARKS
28	90105–12061	BOLT, FLANGE	1					
29	95602–12200	NUT, SELF-LOCKING	1					
30	5YT–2219X–00	COVER	1					
31	97002–08030	BOLT	4					
32	90201–08054	WASHER, PLATE	4					
33	90387–084N8	COLLAR	4					
34	95702–08500	NUT, FLANGE	4					

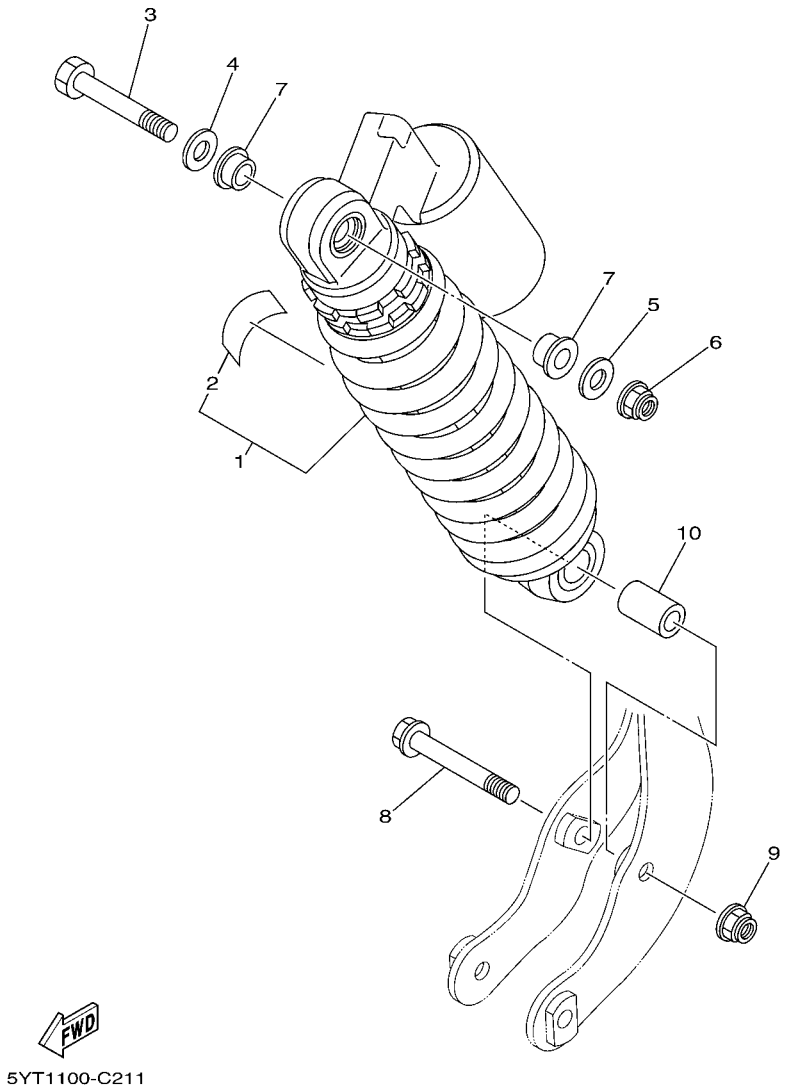

FIG. 21 REAR SUSPENSION

REF. NO.	PART NO.	DESCRIPTION	USA					REMARKS
1	5YT–22210–40	SHOCK ABSORBER ASSY, REAR	1					
2	4AA–22259–80	.LABEL, WARNING	1					
3	90101–12024	BOLT	1					
4	90201–12033	WASHER, PLATE	1					
5	90201–12032	WASHER, PLATE	1					
6	90185–12007	NUT, SELF-LOCKING	1					
7	90387–127G8	COLLAR	2					
8	90105–12050	BOLT, FLANGE	1					
9	95602–12200	NUT, SELF-LOCKING	1					
10	90387–12020	COLLAR	1					

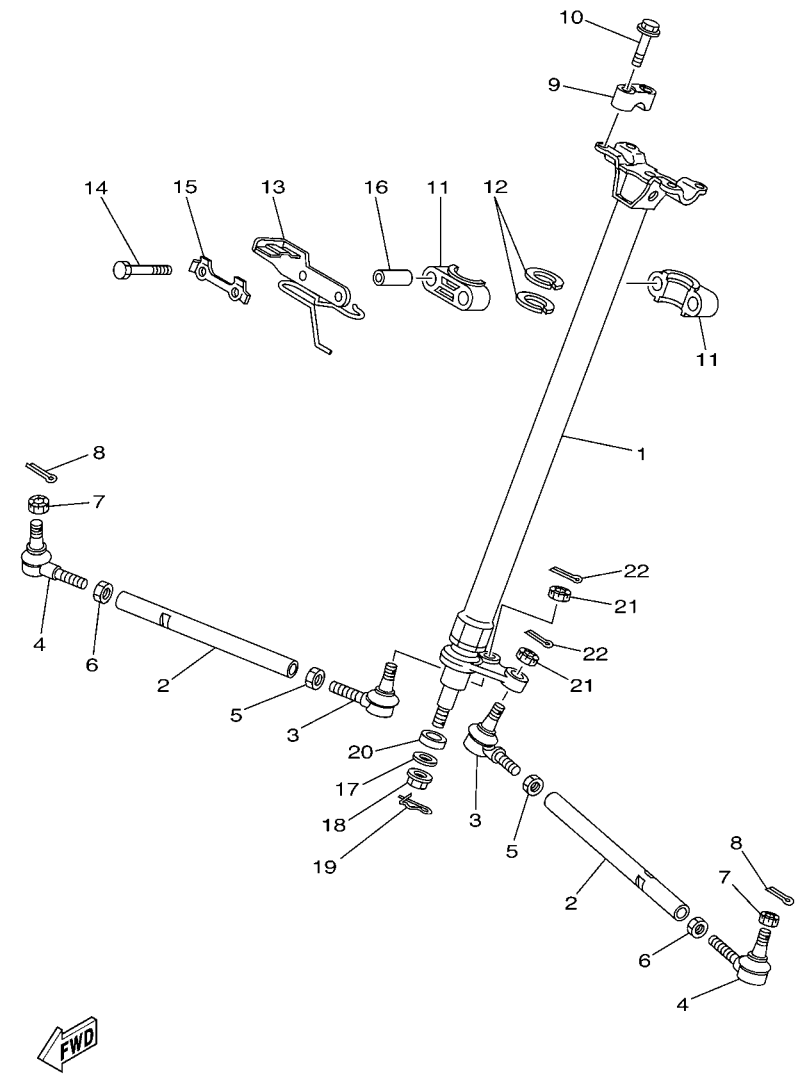

5YT1100-C220

FIG. 22 STEERING

REF. NO.	PART NO.	DESCRIPTION	USA					REMARKS
1	5YT–23813–20	COLUMN, STEERING 2	1					
2	3GD–23831–00	ROD, TIE	2					
3	1UY–23841–01	JOINT, UNIVERSAL 1	2					
4	1UY–23845–01	JOINT, UNIVERSAL 2	2					
5	95302–10700	NUT	2					
6	90170–10010	NUT	2					(L.H. THREAD)
7	90171–10001	NUT, CASTLE	2					
8	91401–20020	PIN, COTTER	2					
9	8K1–23814–00	HOLDER, HANDLE	2					
10	95822–08030	BOLT, FLANGE	4					
11	1UY–23812–00	BEARING, STEERING	2					
12	93112–31011	OIL SEAL	2					
13	5YT–23868–00	BRACKET, STEERING LOWER	1					
14	97022–08060	BOLT	2					
15	1UY–23894–01	WASHER, LOCK 1	1					
16	90387–090R0	COLLAR	2					
17	90201–10036	WASHER, PLATE	1					
18	90185–10019	NUT, SELF-LOCKING	1					
19	91401–20020	PIN, COTTER	1					
20	90387–176R6	COLLAR	1					
21	90171–10001	NUT, CASTLE	2					
22	91401–20020	PIN, COTTER	2					

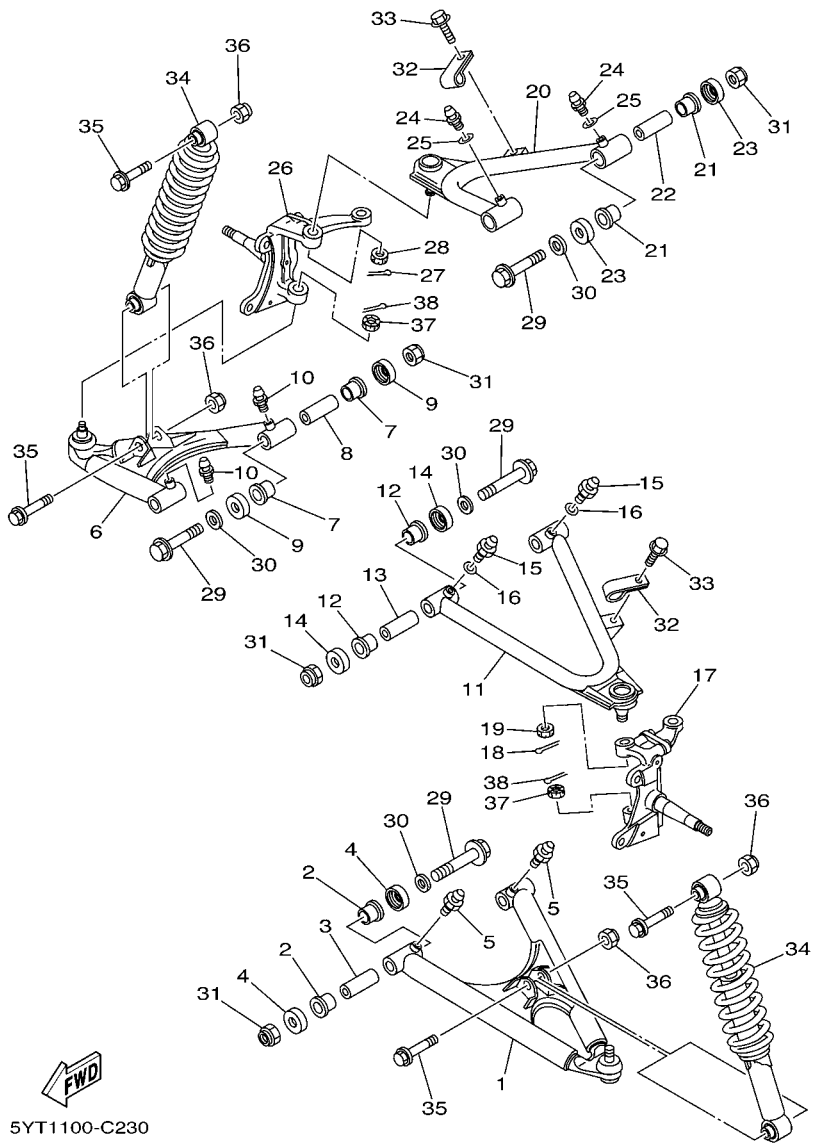

FIG. 23 FRONT SUSPENSION & WHEEL

REF. NO.	PART NO.	DESCRIPTION	USA					REMARKS
1	3GD–23570–40	FRONT LOWER ARM COMP. (LEFT)	1					
2	90381–15088	BUSH, SOLID	4					
3	90387–101R3	COLLAR	2					
4	5YT–23517–00	COVER, THRUST 1	4					
5	93700–06004	NIPPLE, GREASE	2					
6	3GD–23580–40	FRONT LOWER ARM COMP. (RIGHT)	1					
7	90381–15088	BUSH, SOLID	4					
8	90387–101R3	COLLAR	2					
9	5YT–23517–00	COVER, THRUST 1	4					
10	93700–06004	NIPPLE, GREASE	2					
11	3GD–23540–40	FRONT UPPER ARM COMP. (LEFT)	1					
12	90381–15088	BUSH, SOLID	4					
13	90387–101R3	COLLAR	2					
14	5YT–23517–00	COVER, THRUST 1	4					
15	93700–06004	NIPPLE, GREASE	2					
16	90201–063F3	WASHER, PLATE	2					
17	3GD–23501–10	STEERING KNUCKLE ASSY (LEFT)	1					
18	91401–20020	PIN, COTTER	1					
19	90171–10001	NUT, CASTLE	1					
20	3GD–23550–40	FRONT UPPER ARM COMP. (RIGHT)	1					
21	90381–15088	BUSH, SOLID	4					
22	90387–101R3	COLLAR	2					
23	5YT–23517–00	COVER, THRUST 1	4					
24	93700–06004	NIPPLE, GREASE	2					
25	90201–063F3	WASHER, PLATE	2					
26	3GD–23502–10	STEERING KNUCKLE ASSY (RIGHT)	1					
27	91401–20020	PIN, COTTER	1					

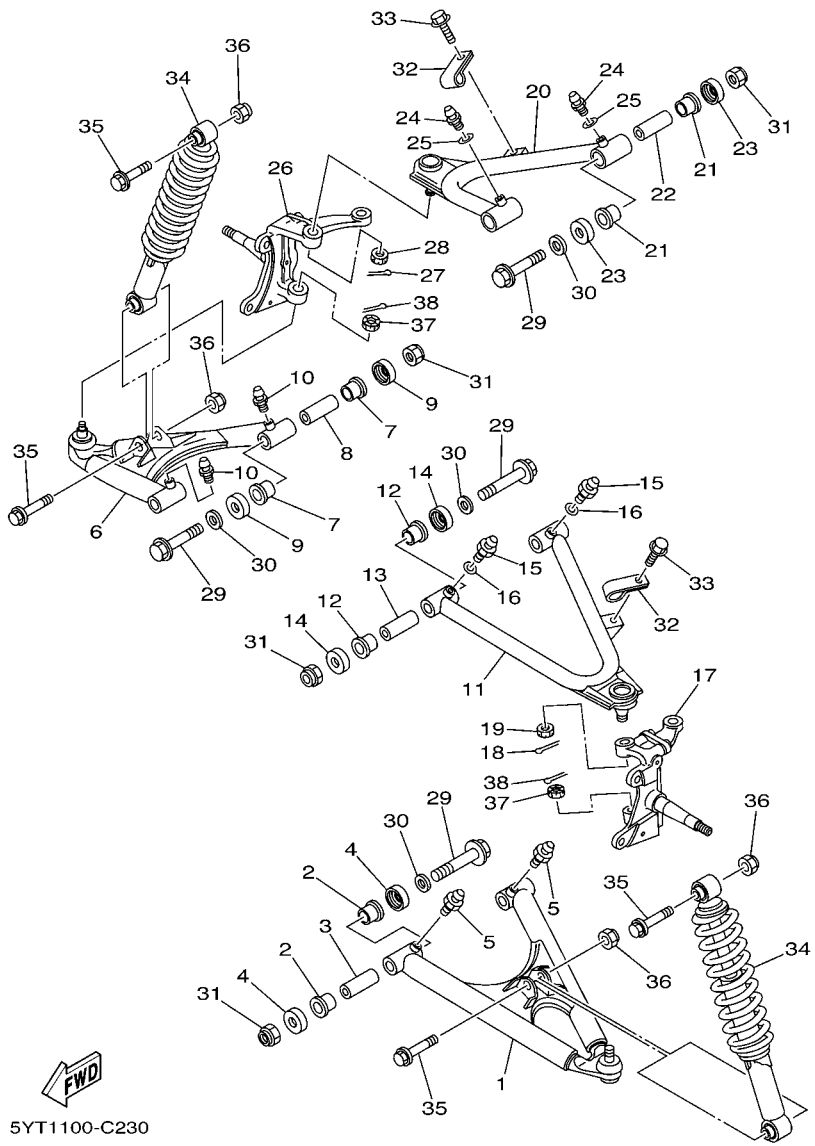

FIG. 23 FRONT SUSPENSION & WHEEL

REF. NO.	PART NO.	DESCRIPTION	USA					REMARKS
28	90171–10001	NUT, CASTLE	1					
29	90105–10135	BOLT, FLANGE	8					
30	90201–10037	WASHER, PLATE	8					
31	90185–10012	NUT, SELF-LOCKING	8					
32	5VM–25886–10	HOLDER, BRAKE HOSE	2					
33	95822–06016	BOLT, FLANGE	2					
34	5YT–23350–10	SHOCK ABSORBER ASSY	2					
35	90105–10131	BOLT, FLANGE	4					
36	90185–10012	NUT, SELF-LOCKING	4					
37	90171–10001	NUT, CASTLE	2					
38	91401–20020	PIN, COTTER	2					

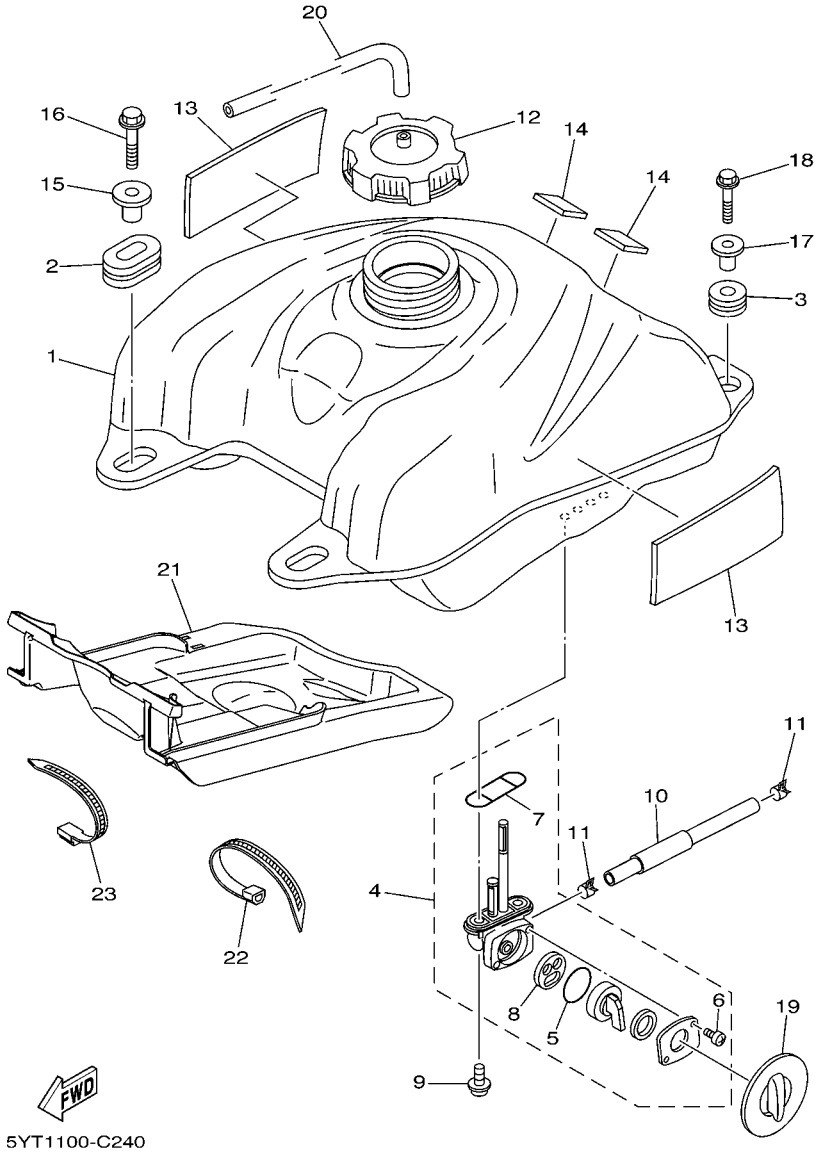

FIG. 24 FUEL TANK

REF. NO.	PART NO.	DESCRIPTION	USA					REMARKS
1	5YT–24110–10	FUEL TANK COMP.	1					
2	90480–01400	GROMMET	2					
3	90480–18290	GROMMET	2					
4	21V–24500–20	FUEL COCK ASSY 1	1					
5	3AJ–24534–10	.SEAL, COCK	1					
6	98507–03008	.SCREW, PAN HEAD	2					
7	4X8–24512–10	.GASKET	1					
8	3AC–24523–00	.VALVE PACKING	1					
9	90149–06108	SCREW	2					
10	5YT–24311–10	PIPE, FUEL 1	1					
11	90467–10038	CLIP	2					
12	5KM–24610–00	CAP ASSY	1					
13	5TG–21541–00	DAMPER 1	2					
14	5YT–24665–00	DAMPER	2					
15	90387–07021	COLLAR	2					
16	95802–06030	BOLT, FLANGE	2					
17	90387–066J1	COLLAR	2					
18	95802–06030	BOLT, FLANGE	2					
19	5YT–24524–00	LEVER, COCK	1					
20	90445–084J1	HOSE (L420)	1					
21	5YT–2414H–00	DAMPER, PLATE 1	1					
22	90464–15195	CLAMP	1					
23	90464–13073	CLAMP	1					

FIG. 25 SEAT

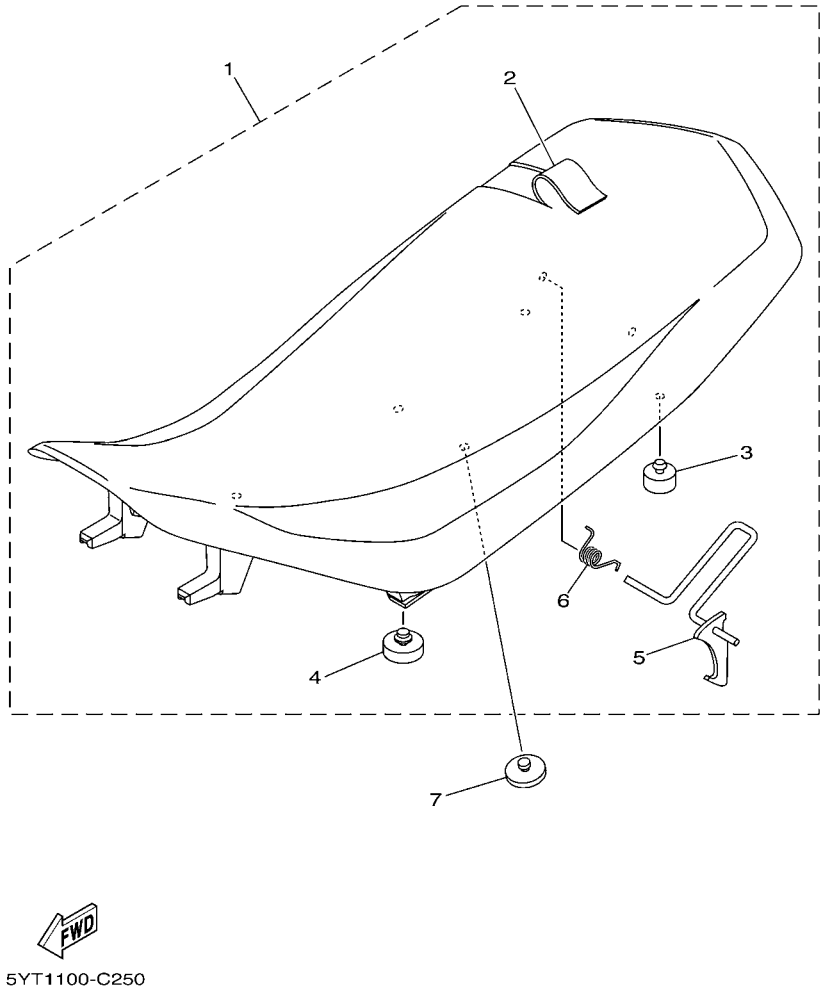

REF. NO.	PART NO.	DESCRIPTION	USA					REMARKS
1	5YT–24710–01	SINGLE SEAT ASSY	1					
2	5YT–24731–00	.COVER, SEAT	1					
3	371–27114–00	.STOPPER, MAIN STAND	2					
4	509–24724–00	.DAMPER, SEAT	2					
5	5YT–24776–10	.LEVER, SEAT	1					
6	90508–23567	.SPRING, TORSION	1					
7	214–24724–00	DAMPER, SEAT	2					

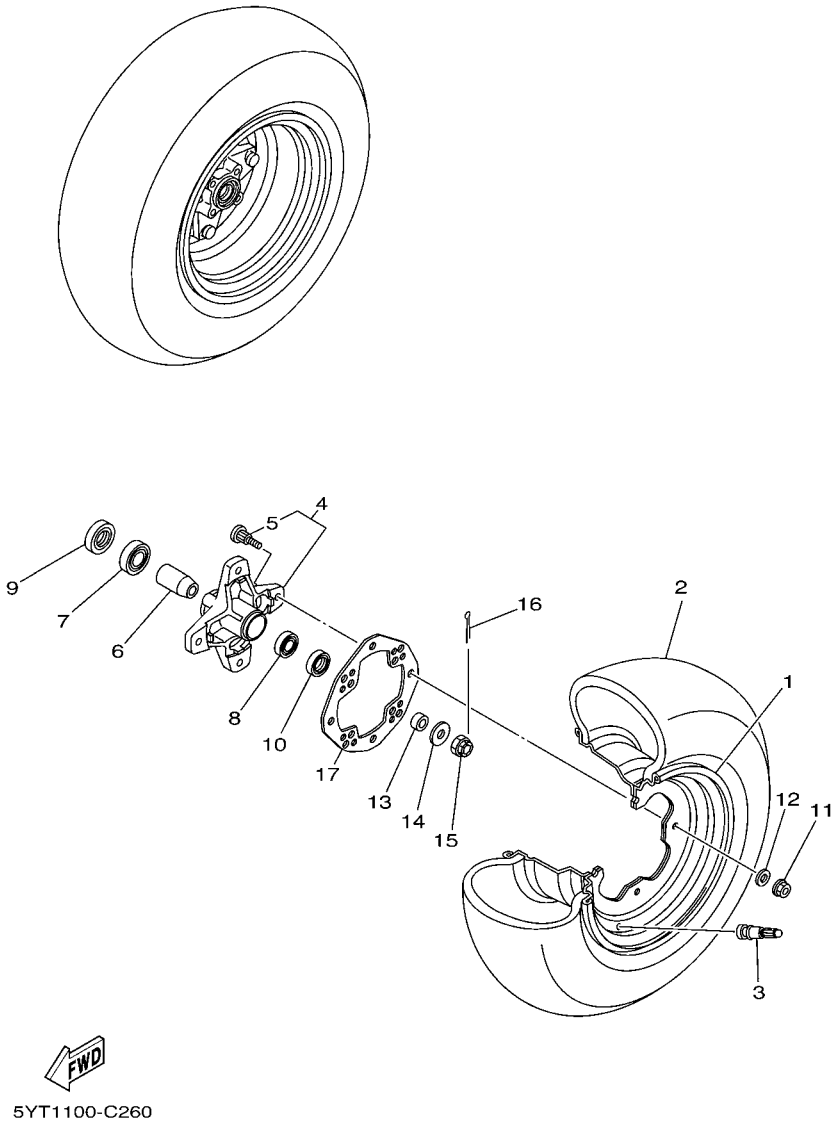

FIG. 26 FRONT WHEEL

REF. NO.	PART NO.	DESCRIPTION	USA					REMARKS
1	1S3–25180–00	WHEEL COMP.	2					
2	94107–10028	TIRE (AT21X7-10 DI-K158B T/L)	2					DURO
3	93900–00022	VALVE, RIM (TR413)	2					TAIHEIYO
4	3GD–25111–20	HUB, FRONT	2					
5	90114–10006	.BOLT, SERRATION	4					
6	1UY–25117–00	SPACER, BEARING	2					
7	93306–00446	BEARING	2					
8	93306–20231	BEARING	2					
9	93105–26026	OIL SEAL	2					
10	93102–22216	OIL SEAL	2					
11	95702–10500	NUT, FLANGE	8					
12	92902–10200	WASHER	8					
13	90387–150R1	COLLAR	2					
14	90201–14586	WASHER, PLATE	2					
15	90171–14002	NUT, CASTLE	2					
16	91401–30025	PIN, COTTER	2					
17	1S3–25127–01	COVER, PLATE	2					

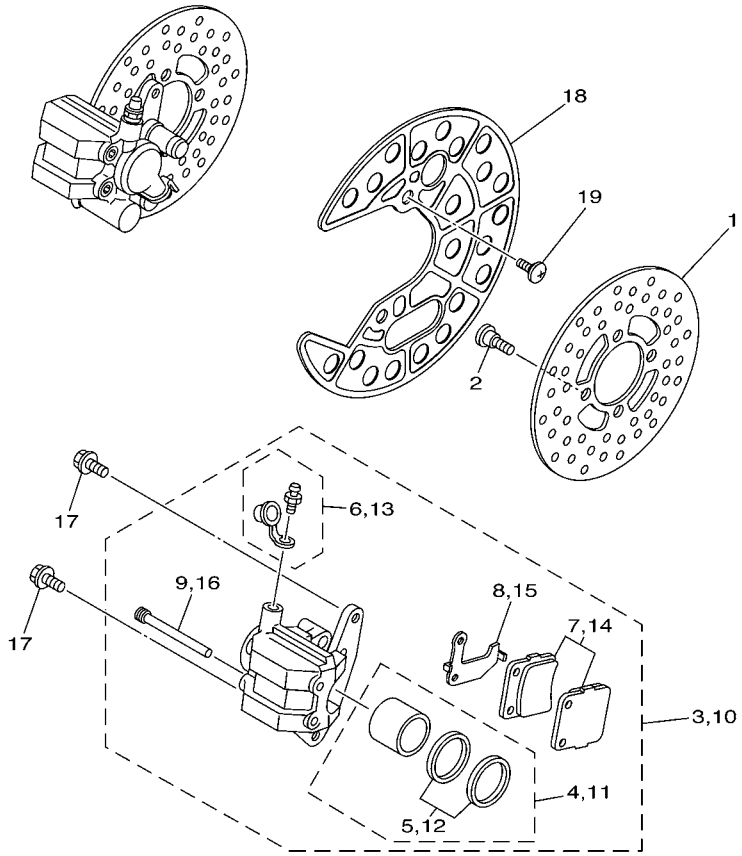

5YT1100-C270

FIG. 27 FRONT BRAKE CALIPER

REF. NO.	PART NO.	DESCRIPTION	USA					REMARKS
1	3GD–2582T–10	DISC, BRAKE (LEFT)	2					
2	90109–08082	BOLT	8					
3	5LP–2580T–00	CALIPER ASSY (LEFT)	1					
4	3GD–W0057–00	.PISTON ASSY, CALIPER	1					
5	3GD–W0047–00	..CALIPER SEAL KIT	1					
6	1UY–W0048–50	.BLEED SCREW KIT	1					
7	5LP–W0045–00	.BRAKE PAD KIT	1					
8	3GD–25827–00	.SHIM, CALIPER	1					
9	3GD–25933–00	.PIN, PAD	2					
10	5LP–2580U–00	CALIPER ASSY (RIGHT)	1					
11	3GD–W0057–00	.PISTON ASSY, CALIPER	1					
12	3GD–W0047–00	..CALIPER SEAL KIT	1					
13	1UY–W0048–50	.BLEED SCREW KIT	1					
14	5LP–W0045–00	.BRAKE PAD KIT	1					
15	3GD–25828–00	.SHIM, CALIPER	1					
16	3GD–25933–00	.PIN, PAD	2					
17	90105–08161	BOLT, FLANGE	4					
18	5YT–2514A–00	RING, WHEEL 1	2					
19	90149–06117	SCREW	4					

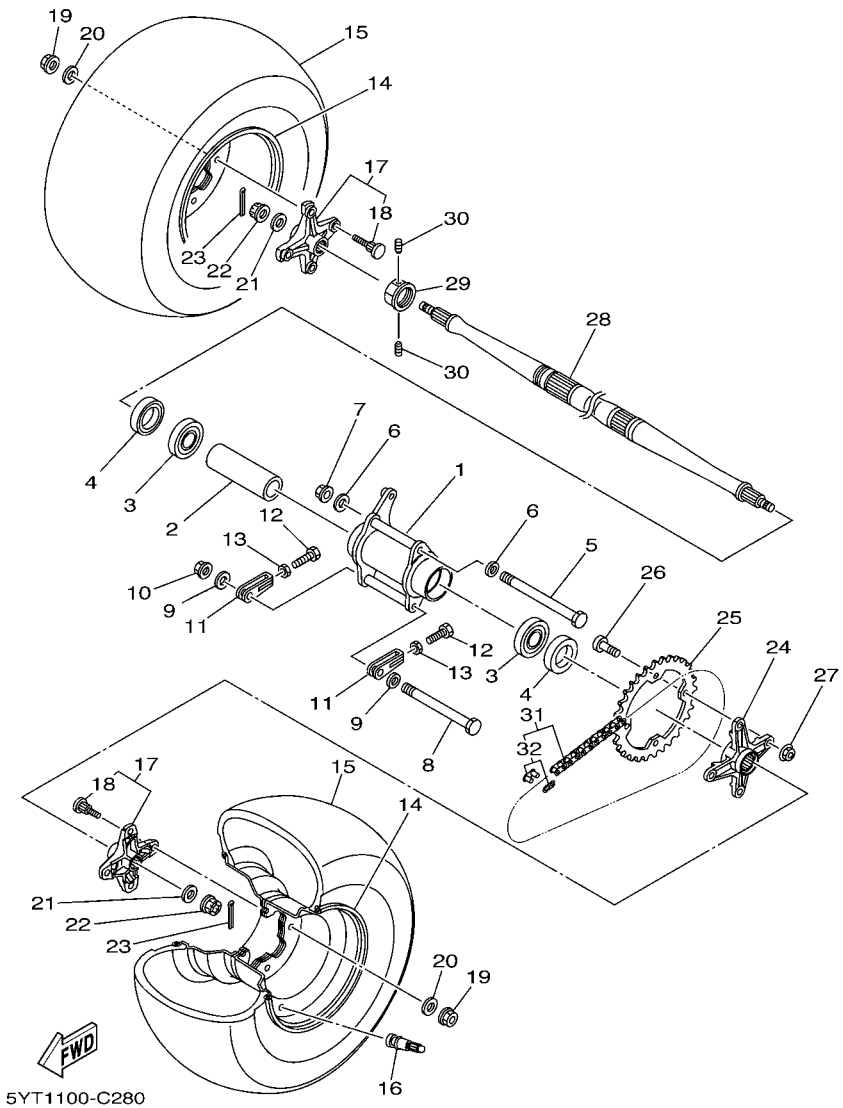

FIG. 28 REAR WHEEL

REF. NO.	PART NO.	DESCRIPTION	USA					REMARKS
1	5YT–25311–00	HUB, REAR	1					
2	5YT–25317–00	SPACER, BEARING	1					
3	93306–00710	BEARING	2					
4	93106–46001	OIL SEAL	2					
5	90101–12032	BOLT	1					
6	90201–12045	WASHER, PLATE	2					
7	90179–12009	NUT	1					
8	90101–10029	BOLT	1					
9	90201–10052	WASHER, PLATE	2					
10	90179–10024	NUT	1					
11	3GD–25388–00	PULLER, CHAIN 1	2					
12	90101–08006	BOLT	2					
13	95302–08600	NUT	2					
14	1S3–25390–00	REAR WHEEL COMP.	2					
15	94110–09028	TIRE (AT20X10-9 DI-K778A T/L)	2					DURO
16	93900–00022	VALVE, RIM (TR413)	2					TAIHEIYO
17	1S3–25383–20	COLLAR, WHEEL	2					
18	90114–10013	.BOLT, SERRATION	4					
19	95702–10500	NUT, FLANGE	8					
20	92902–10200	WASHER	8					
21	90201–14021	WASHER, PLATE	2					
22	90171–14004	NUT, CASTLE	2					
23	91401–30030	PIN, COTTER	2					
24	5YT–25386–00	COLLAR, SPROCKET AXLE	1					
25	5TG–25438–10	SPROCKET, DRIVEN (38T)	1					
26	90109–10013	BOLT	4					
27	90185–10011	NUT, SELF-LOCKING	4					

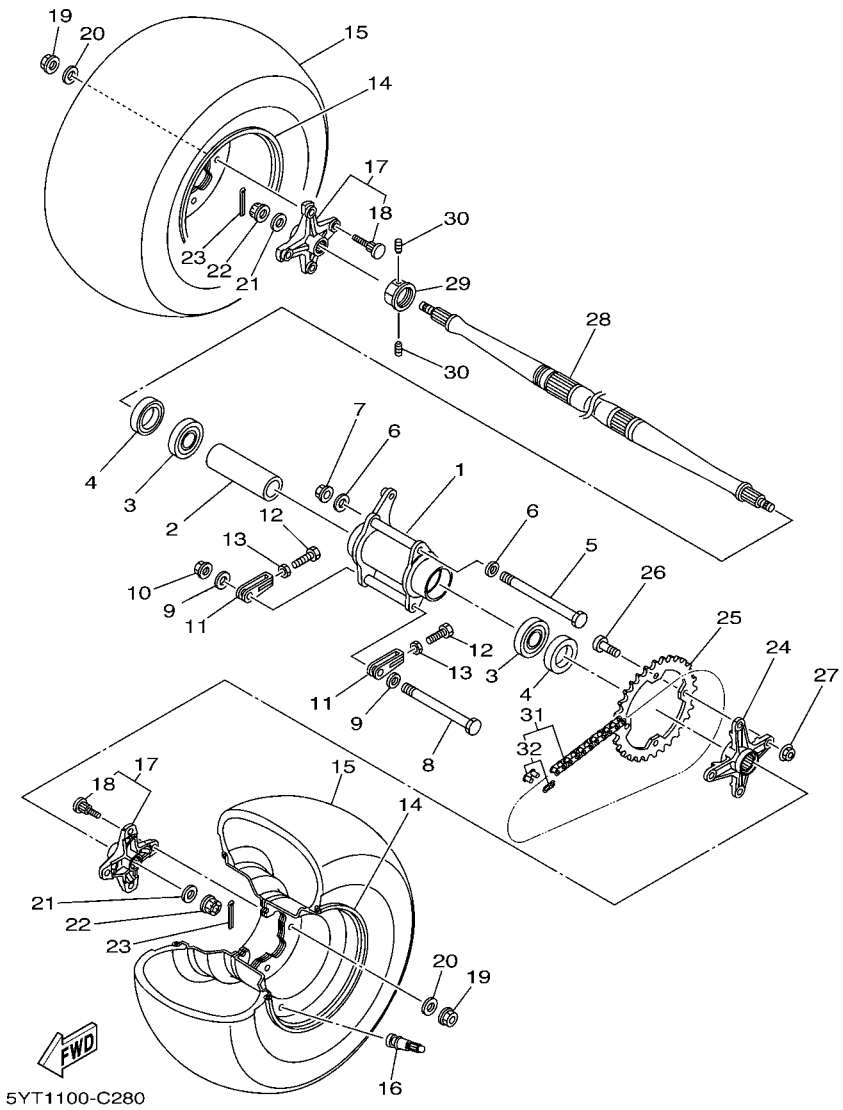

FIG. 28 REAR WHEEL

REF. NO.	PART NO.	DESCRIPTION	USA					REMARKS
28	5YT–25381–10	AXLE, WHEEL	1					
29	90170–33010	NUT	1					
30	90113–06055	BOLT, SET	2					
31	94581–87098	CHAIN (DID520V 98L)	1					
32	94681–87011	.JOINT, CHAIN (DID520V FJ)	1					

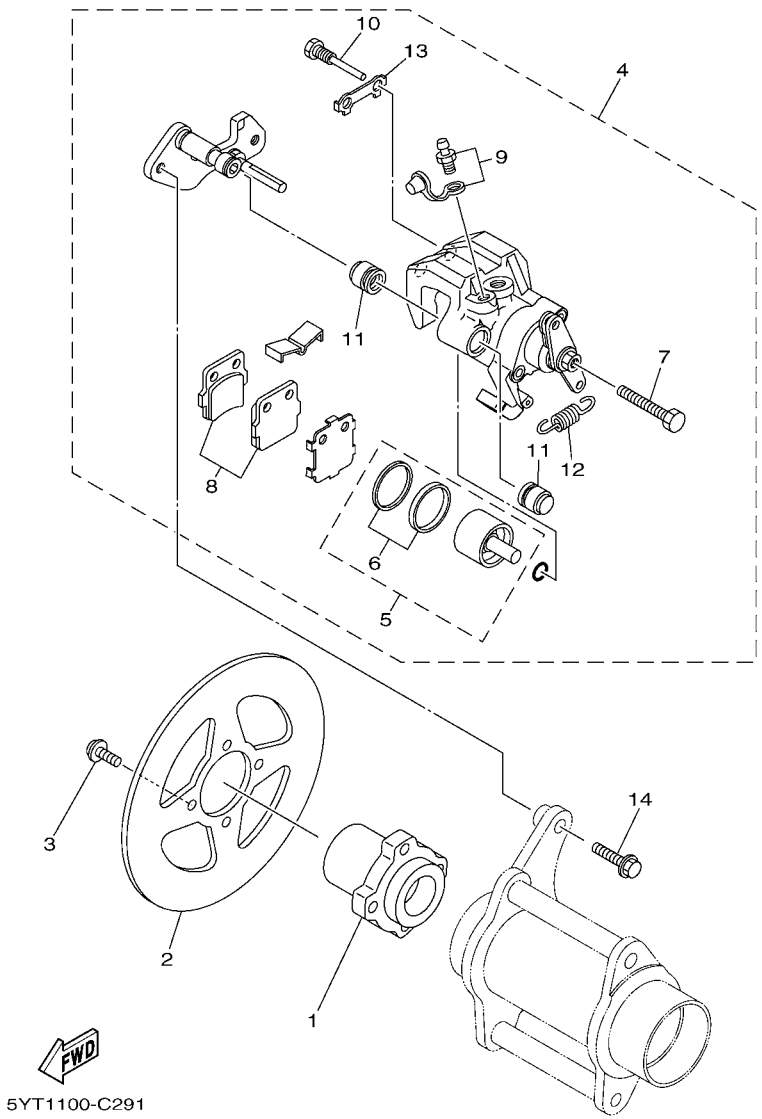

FIG. 29 REAR BRAKE

REF. NO.	PART NO.	DESCRIPTION	USA					REMARKS
1	5YT–25712–00	BRACKET, DISC	1					
2	5TG–2582W–00	DISK, REAR BRAKE 2	1					
3	90109–081F0	BOLT	4					
4	5YT–2580W–00	CALIPER ASSY, REAR 2	1					
5	5LP–W0057–50	.PISTON ASSY, CALIPER	1					
6	5LP–W0047–50	..CALIPER SEAL KIT	1					
7	1UY–25972–51	.ADJUST BOLT	1					
8	5LP–W0046–50	.BRAKE PAD KIT 2	1					
9	1UY–W0048–50	.BLEED SCREW KIT	1					
10	1UY–25924–51	.PIN, PAD	2					
11	1UY–25917–51	.BOOT, CALIPER	2					
12	5YT–25977–50	.SPRING, RETURN	1					
13	1UY–25933–51	.WASHER, PAD PIN	1					
14	90105–08182	BOLT, FLANGE	2					

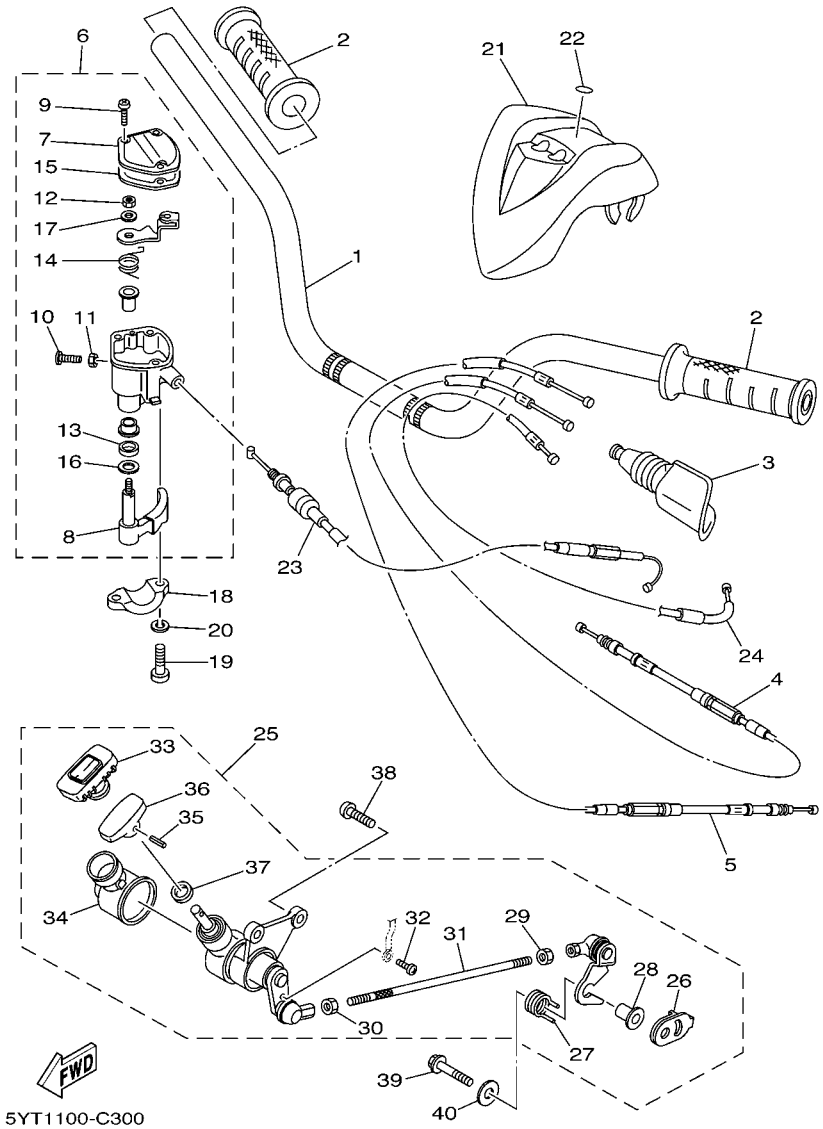

FIG. 30 STEERING HANDLE & CABLE

REF. NO.	PART NO.	DESCRIPTION	USA					REMARKS
1	5YT–26111–10	HANDLEBAR	1					
2	5LP–26241–00	GRIP	2					
3	31A–26372–00	COVER, HANDLE LEVER 1	1					
4	5YT–26335–10	CABLE, CLUTCH	1					
5	5YT–26341–01	WIRE, BRAKE 1	1					
6	4KB–26250–21	THROTTLE LEVER ASSY	1					
7	4KB–2628F–20	.CAP, GEAR	1					
8	1NV–2625G–01	.LEVER, THROTTLE	1					
9	4KB–2632G–00	.SCREW	3					
10	4KB–26256–00	.SCREW, GRIP END	1					
11	95602–05100	.NUT, U	1					
12	4KB–26258–00	.NUT, LOCK	1					
13	93104–09025	.OIL SEAL	1					
14	1NV–26304–00	.SPRING	1					
15	4KB–2628G–00	.GASKET	1					
16	1NV–26129–00	.WASHER	1					
17	1NV–26398–00	.WASHER	1					
18	1S3–82913–00	HOLDER, LEVER LOWER 1	1					
19	98502–05020	SCREW, PAN HEAD	2					
20	92902–05600	WASHER, PLATE	2					
21	5YT–26124–20	PROTECTOR, HANDLEBAR	1					
22	5GT–2836B–10	TUNING FORK MARK	1					
23	5YT–26311–10	CABLE, THROTTLE 1	1					
24	5YT–26331–00	CABLE, STARTER 1	1					
25	5YT–26150–20	REV. LEVER ASSY.	1					
26	4SH–18198–00	.LEVER	1					
27	90508–35764	.SPRING, TORSION	1					

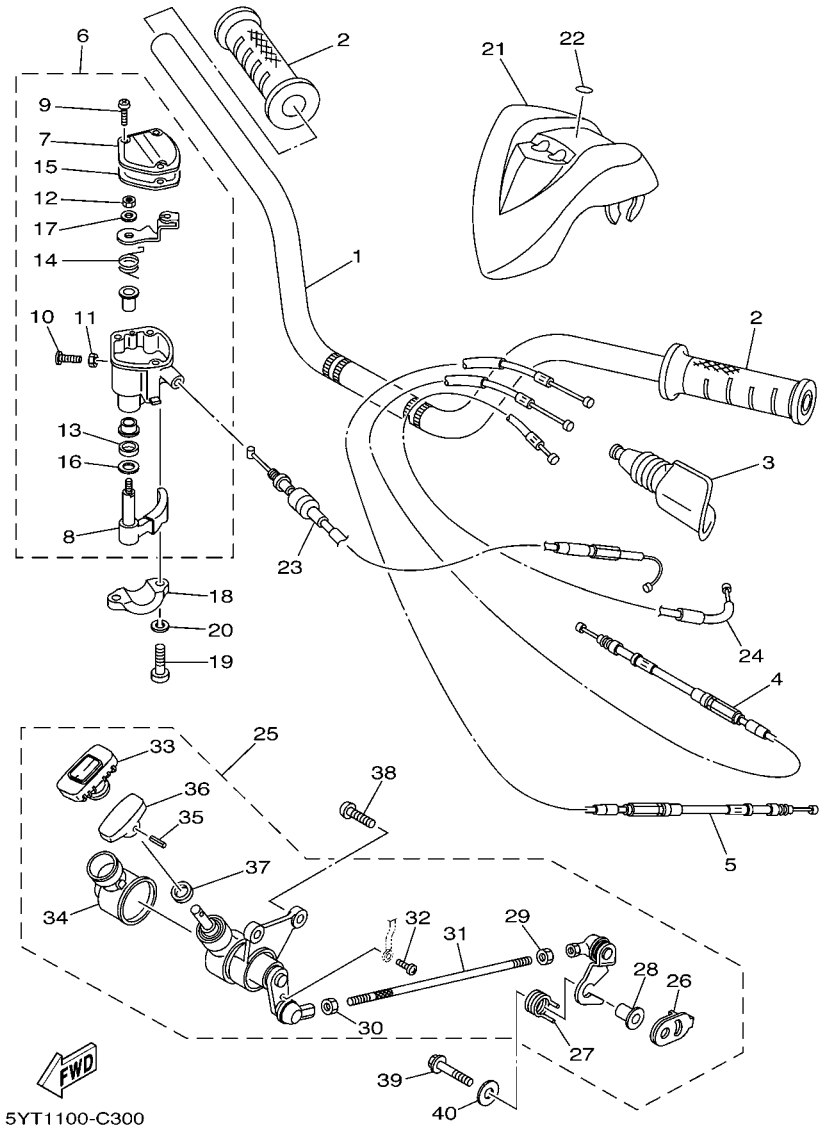

FIG. 30 STEERING HANDLE & CABLE

REF. NO.	PART NO.	DESCRIPTION	USA					REMARKS
28	90387–063W7	.COLLAR	1					
29	95317–06700	.NUT	1					
30	90170–06023	.NUT	1					
31	3GD–26166–10	.ROD, JOINT	1					
32	98502–04008	.SCREW, PAN HEAD	1					
33	1UY–26153–00	.GRIP, LEVER	1					
34	1UY–26372–00	.COVER, HANDLE LEVER 1	1					
35	91609–40016	.PIN, SPRING	1					
36	1UY–26157–00	.LEVER, LOCK	1					
37	93109–08050	.OIL SEAL	1					
38	92012–08020	BOLT, BUTTON HEAD	2					
39	95812–06035	BOLT, FLANGE	1					
40	90201–06036	WASHER, PLATE	1					

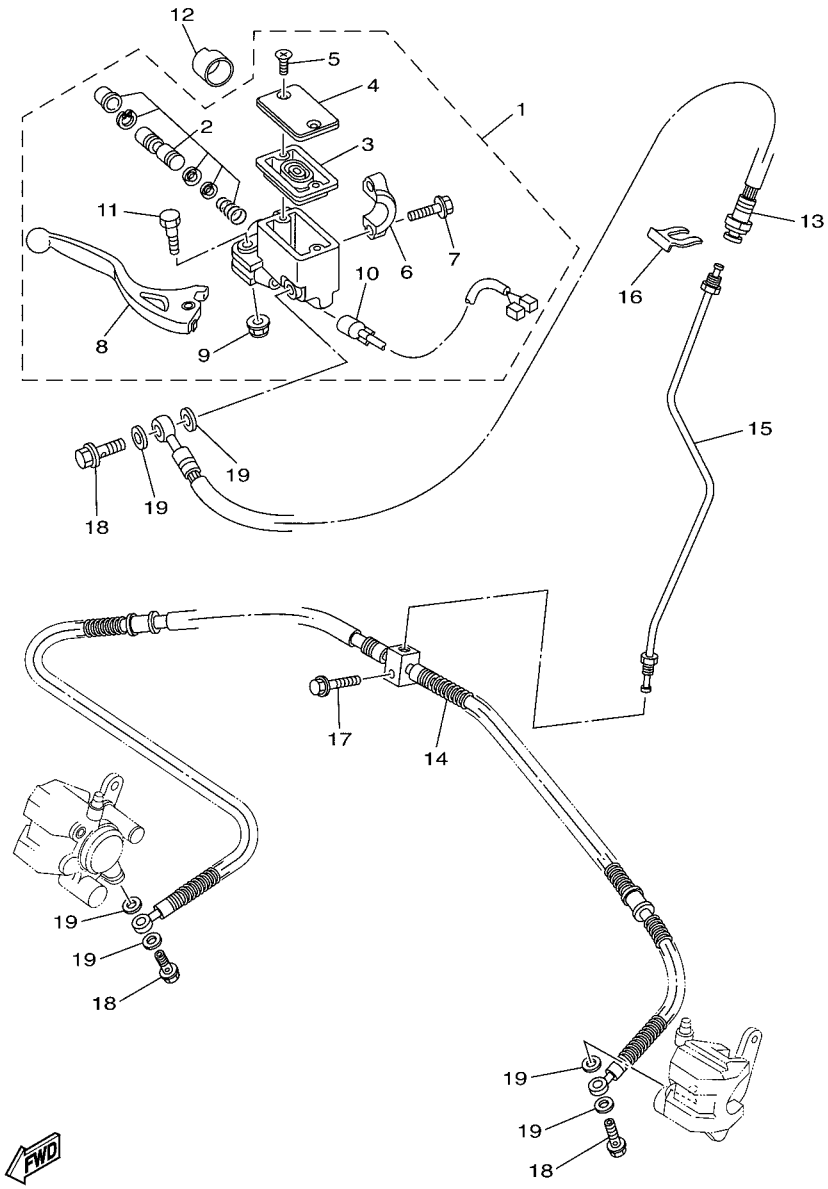

1BS9110-M310

FIG. 31 FRONT MASTER CYLINDER

REF. NO.	PART NO.	DESCRIPTION	USA					REMARKS
1	5LP–2583T–03	MASTER CYLINDER ASSY	1					
2	5LP–W0041–00	.CYLINDER KIT, MASTER	1					
3	4L0–25854–00	.DIAPHRAGM, RESERVOIR	1					
4	5LP–25852–02	.CAP, RESERVOIR	1					
5	98702–04012	.SCREW, FLAT HEAD	2					
6	5MV–25867–00	.BRACKET, MASTER CYLINDER	1					
7	5MV–25833–00	.BOLT, FITTING	2					
8	5LP–83922–00	.LEVER 2	1					
9	95701–06500	.NUT, WITH WASHER	1					
10	5LP–83980–00	.FRONT STOP SWITCH ASSY	1					
11	5MV–2589F–00	.BOLT, LEVER	1					
12	1UY–26259–00	COLLAR	1					
13	5YT–25872–11	HOSE, BRAKE 1	1					
14	5YT–25873–10	HOSE, BRAKE 2	1					
15	5YT–25871–10	PIPE, BRAKE	1					
16	2GU–25866–00	CIRCLIP	1					
17	95822–06025	BOLT, FLANGE	1					
18	90401–10015	BOLT, UNION	3					
19	90201–10118	WASHER, PLATE	6					

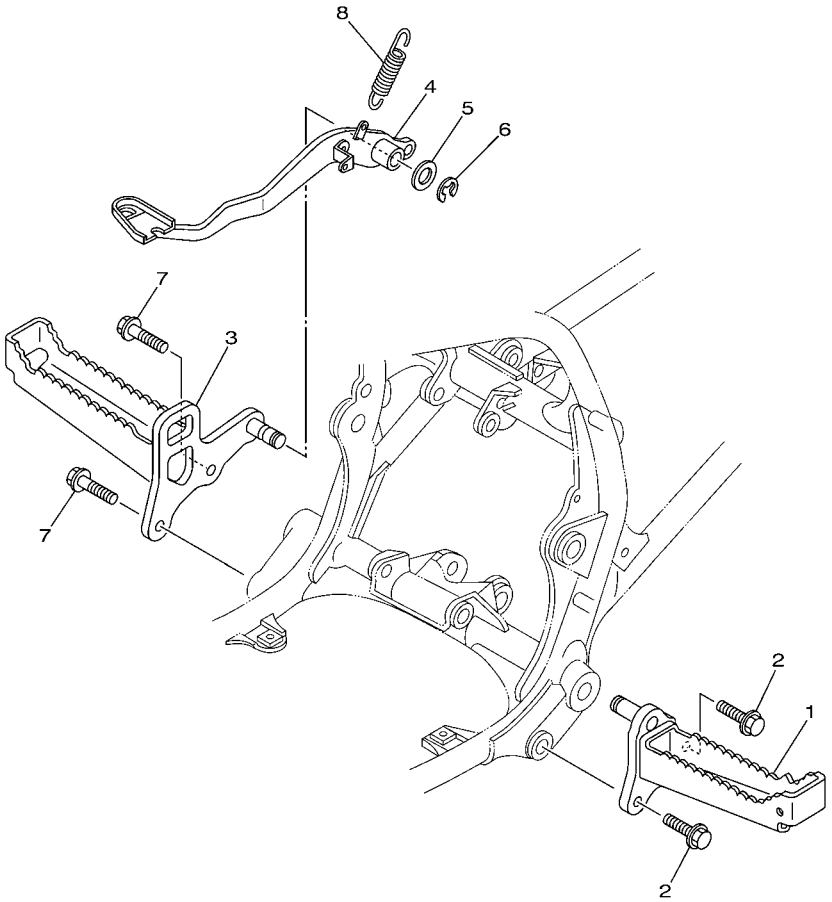

5YT1100-C320

FIG. 32 STAND & FOOTREST

REF. NO.	PART NO.	DESCRIPTION	USA					REMARKS
1	5YT–27411–10	FOOTREST 1	1					
2	95812–10025	BOLT, FLANGE	2					
3	5YT–27421–10	FOOTREST 2	1					
4	5YT–27211–10	PEDAL, BRAKE	1					
5	90201–15018	WASHER, PLATE	1					
6	93430–12008	CIRCLIP	1					
7	95812–10025	BOLT, FLANGE	2					
8	90506–20026	SPRING, TENSION	1					

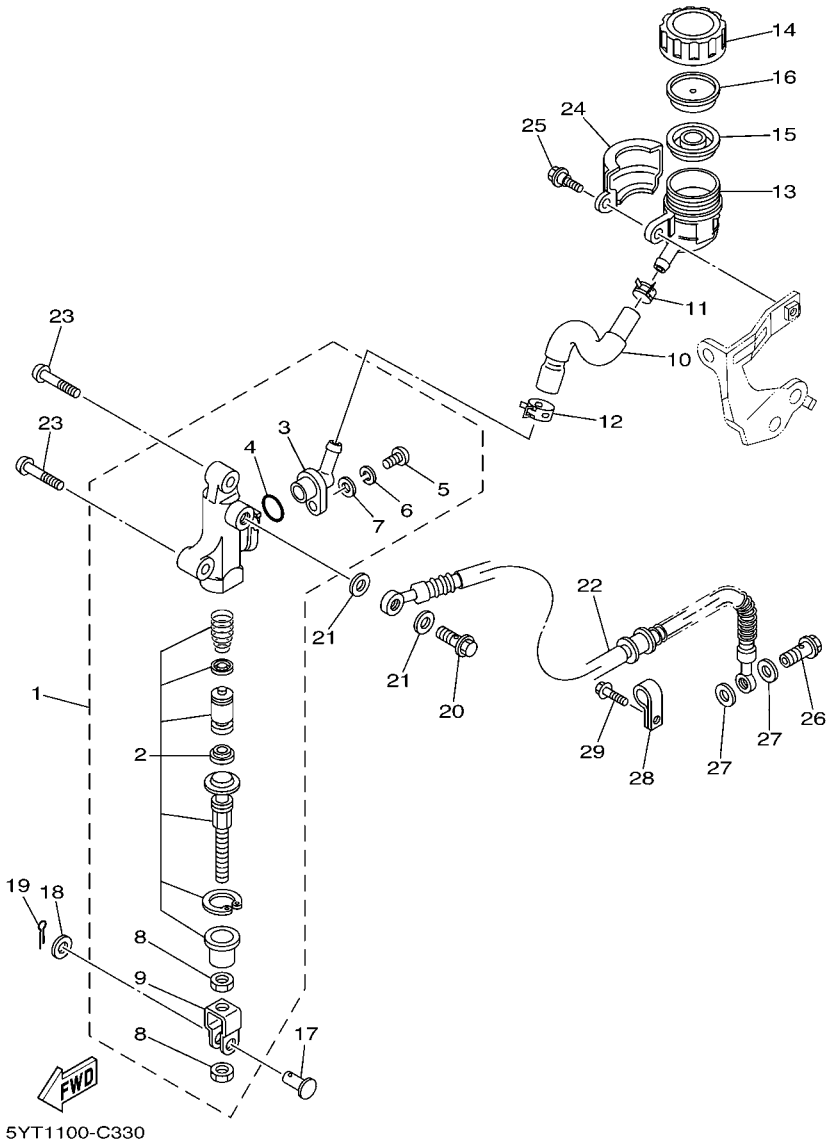

FIG. 33 REAR MASTER CYLINDER

REF. NO.	PART NO.	DESCRIPTION	USA					REMARKS
1	5YT–2583V–00	RR. MASTER CYLINDER ASSY.	1					
2	5FK–W0042–50	.CYLINDER KIT, MASTER	1					
3	47X–2582A–50	.JOINT	1					
4	93210–15620	.O-RING	1					
5	98506–04012	.SCREW, PAN HEAD	1					
6	92906–04100	.WASHER, SPRING	1					
7	92906–04600	.WASHER, PLATE	1					
8	4SS–27218–00	.NUT	2					
9	2YK–27222–00	.JOINT	1					
10	5YT–25895–00	HOSE, RESERVOIR	1					
11	90467–11044	CLIP	1					
12	90467–140A6	CLIP	1					
13	4EW–25894–00	TANK, RESERVOIR	1					
14	3XP–25852–50	CAP, RESERVOIR	1					
15	2VN–25854–00	DIAPHRAGM, RESERVOIR	1					
16	2VN–25855–00	BUSH,DIAPHRAGM	1					
17	90240–08005	PIN, CLEVIS	1					
18	90201–08066	WASHER, PLATE	1					
19	91401–16012	PIN, COTTER	1					
20	90401–10015	BOLT, UNION	1					
21	90201–10118	WASHER, PLATE	2					
22	5YT–25874–10	HOSE, BRAKE	1					
23	92012–08030	BOLT, BUTTON HEAD	2					
24	5YT–25888–00	COVER, RESERVOIR TANK	1					
25	90109–06240	BOLT	1					
26	90401–10015	BOLT, UNION	1					
27	90201–10118	WASHER, PLATE	2					

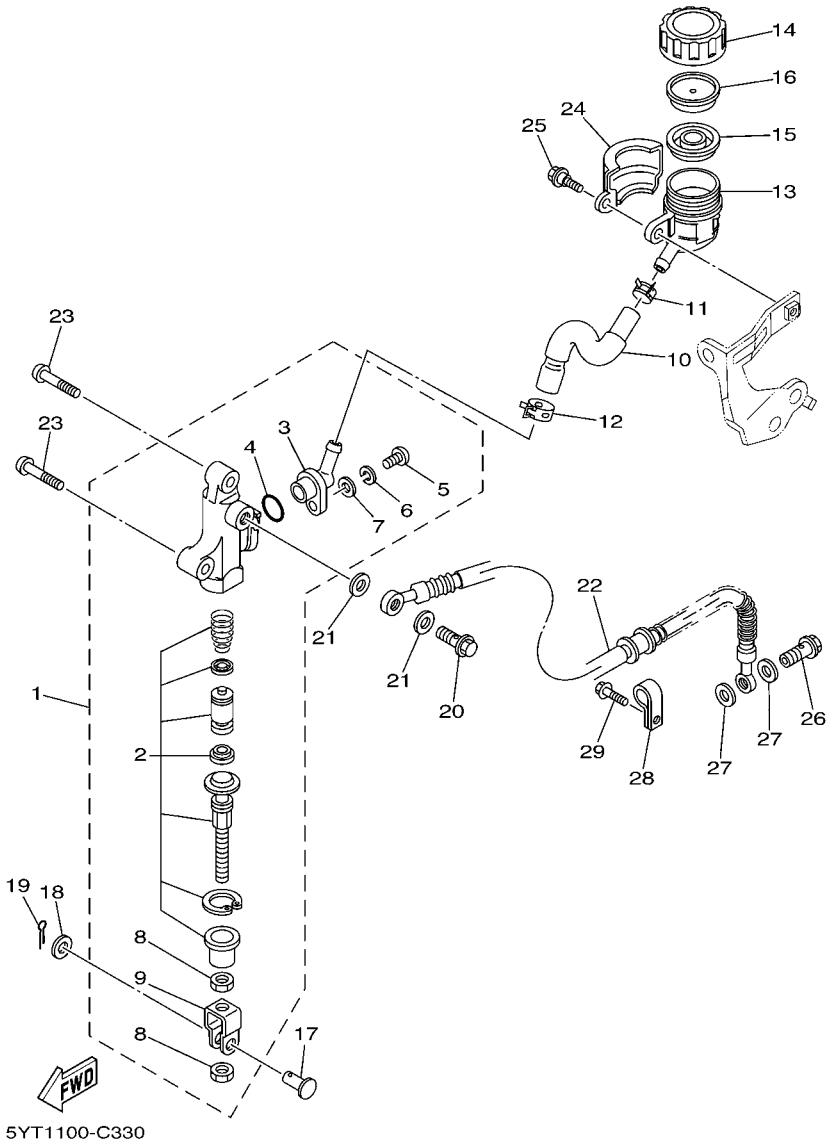

FIG. 33 REAR MASTER CYLINDER

REF. NO.	PART NO.	DESCRIPTION	USA					REMARKS
28	5YT–25876–10	HOLDER, BRAKE HOSE 2	1					
29	95802–06020	BOLT, FLANGE	1					

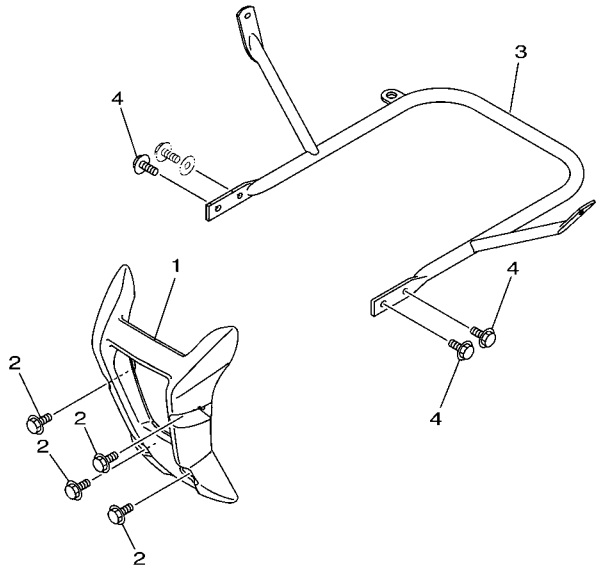

5YT1110-C340

FIG. 34 GUARD

REF. NO.	PART NO.	DESCRIPTION	USA					REMARKS
1	5YT–2845N–00	BAR, CARRY FRONT	1					
2	90109–08100	BOLT	4					
3	5YT–2845R–60	BAR, CARRY REAR	1					
4	95812–08016	BOLT, FLANGE	3					

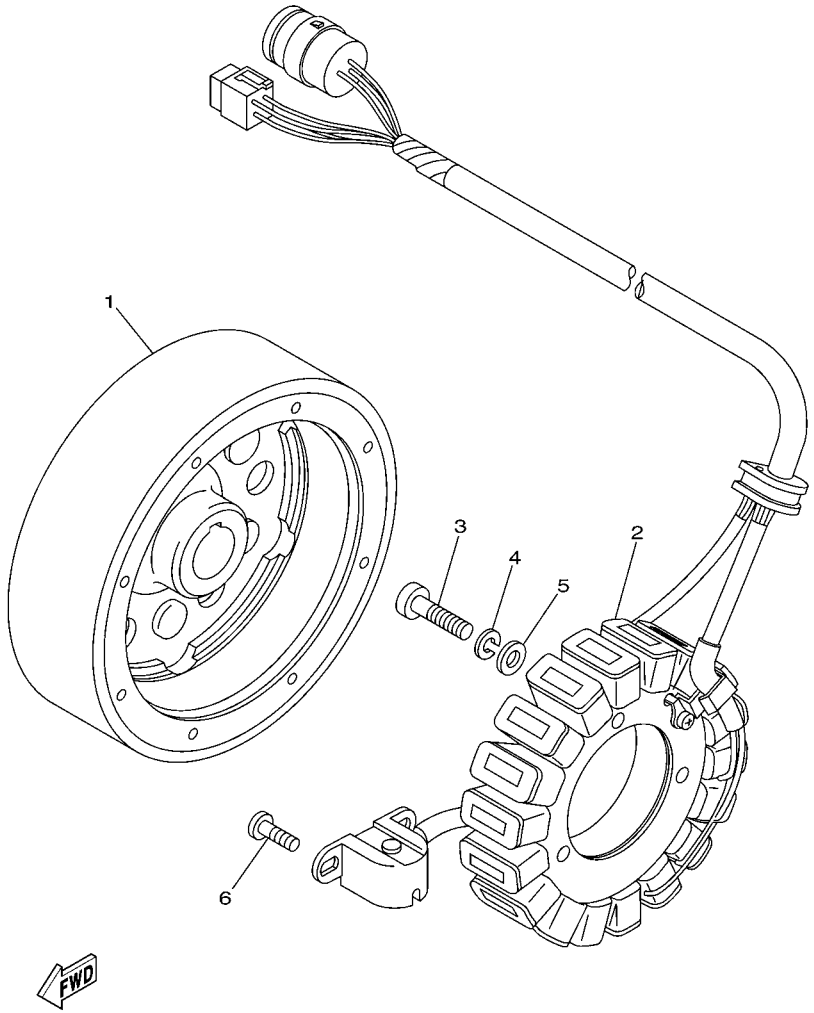

FIG. 35 GENERATOR

REF. NO.	PART NO.	DESCRIPTION	USA					REMARKS
1	5NF–81450–01	ROTOR ASSY	1					
2	5NF–81410–00	STATOR ASSY	1					
3	92502–06030	SCREW, PAN HEAD	3					
4	92902–06100	WASHER, SPRING	3					
5	92902–06600	WASHER, PLATE	3					
6	98502–05014	SCREW, PAN HEAD	2					

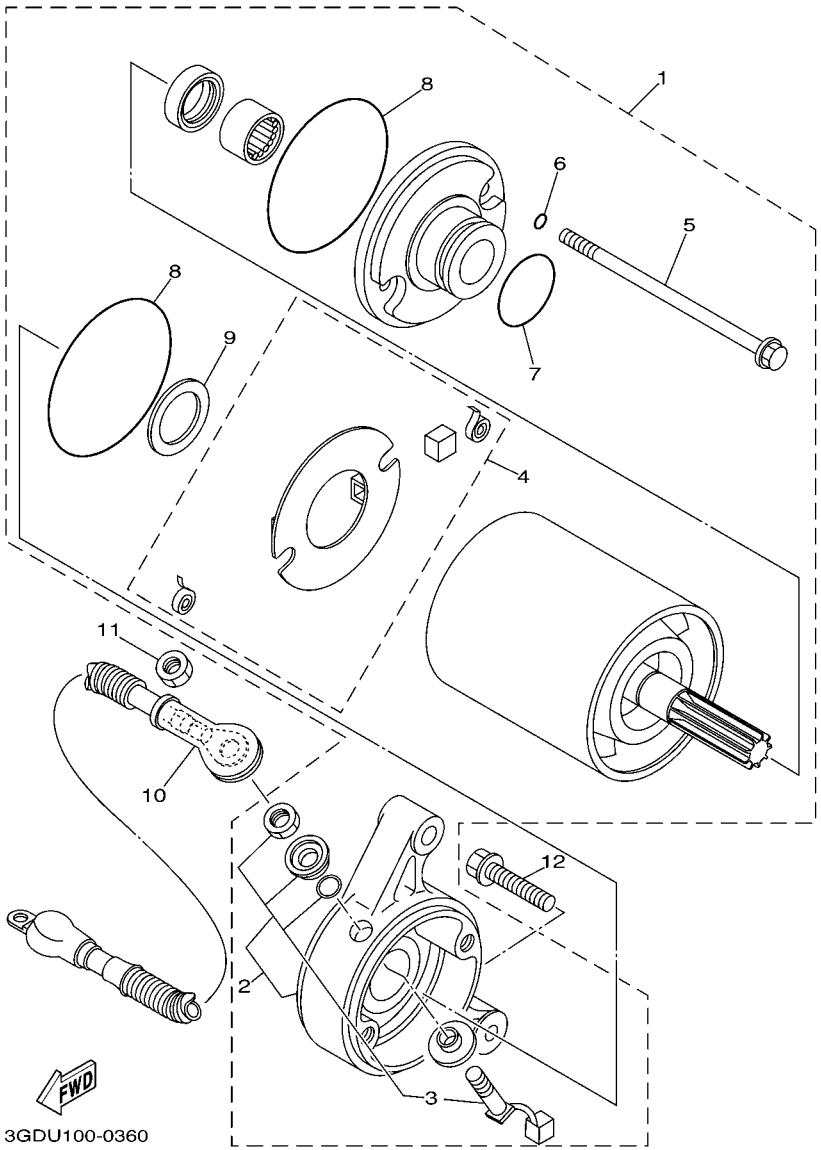

FIG. 36 STARTING MOTOR

REF. NO.	PART NO.	DESCRIPTION	USA					REMARKS
1	1UY–81890–00	MOTOR ASSY	1					
2	1UY–81820–51	.REAR BRACKET ASSY	1					
3	1UY–81818–50	..BRUSH AND BOLT	1					
4	8L6–81840–50	.BRUSH HOLDER ASSY	1					
5	3GD–81826–00	.BOLT, THROUGH	2					
6	8L6–81847–50	.O-RING	2					
7	1UY–81847–50	.O-RING	1					
8	4H7–81844–50	.O-RING	2					
9	4H7–81843–50	.WASHER 1	1					
10	5YT–81815–00	CORD, STARTER MOTOR	1					
11	95302–06600	NUT	1					
12	95022–06030	BOLT, FLANGE	2					

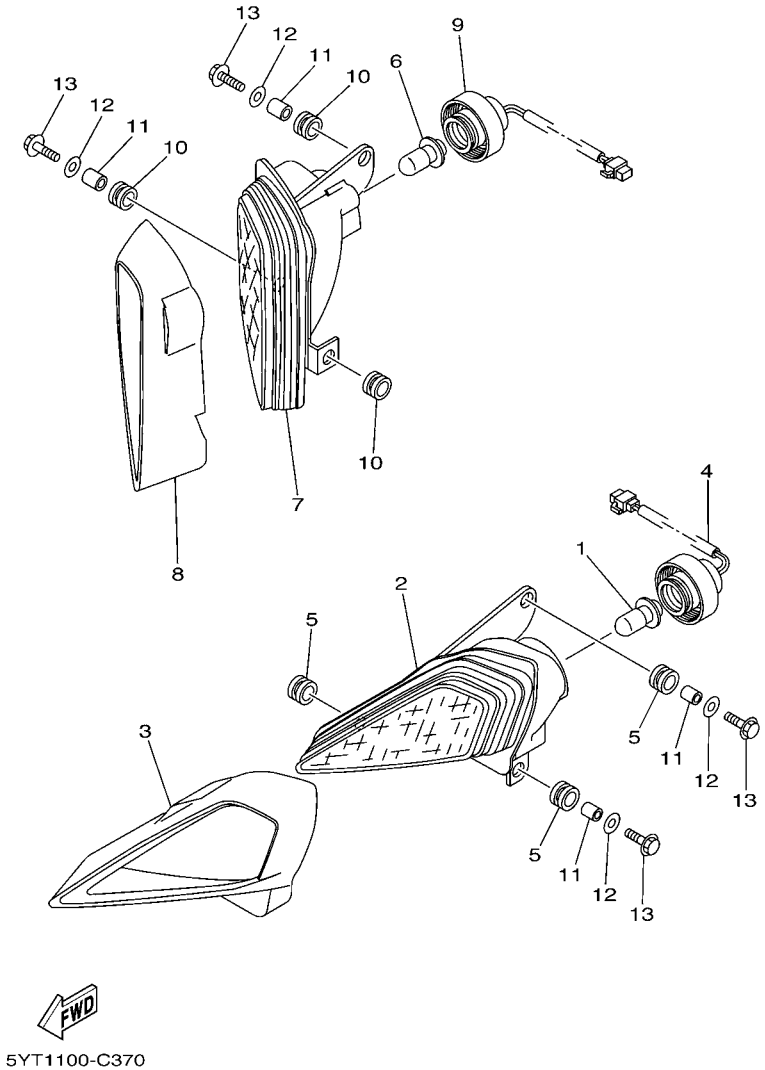

FIG. 37 HEADLIGHT

REF. NO.	PART NO.	DESCRIPTION	USA					REMARKS
1	4KB–84314–01	BULB (12V-30/30W)	1					
2	5TG–84110–03	HEADLIGHT UNIT ASSY	1					
3	5TG–84165–01	RIM, HEADLIGHT COVER 1	1					
4	5TG–84140–01	SOCKET CORD ASSY	1					
5	90480–14102	GROMMET	3					
6	4KB–84314–01	BULB (12V-30/30W)	1					
7	5TG–84310–03	HEADLIGHT UNIT ASSY	1					
8	5TG–84166–01	RIM, HEADLIGHT COVER 2	1					
9	5TG–84340–01	SOCKET CORD ASSY 1	1					
10	90480–14102	GROMMET	3					
11	90387–07598	COLLAR	4					
12	90201–06078	WASHER, PLATE	4					
13	95802–06025	BOLT, FLANGE	4					

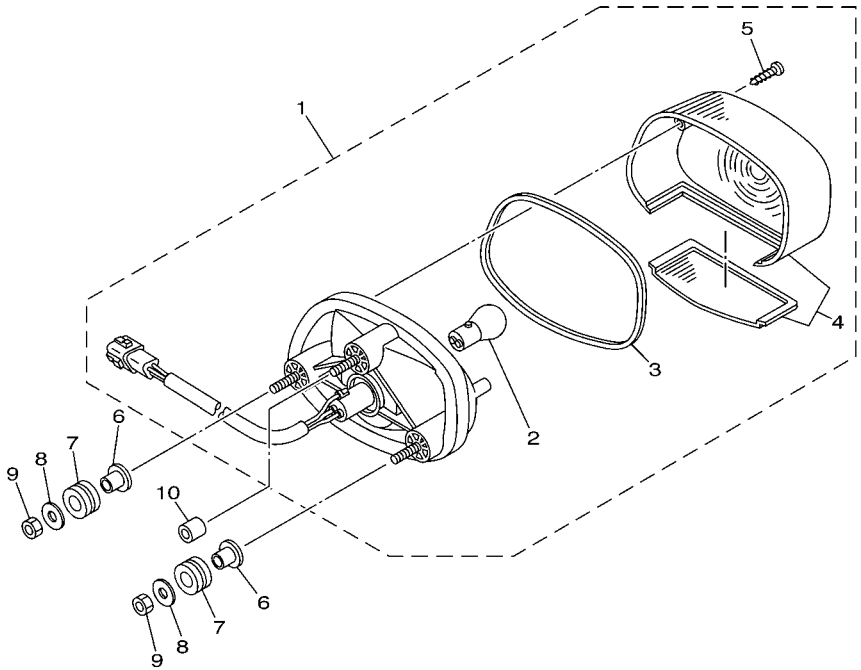

5YT1100-C380

FIG. 38 TAILLIGHT

REF. NO.	PART NO.	DESCRIPTION	USA					REMARKS
1	5LP–84700–00	TAILLIGHT ASSY	1					
2	256–84714–60	.BULB (12V-21/5W)	1					
3	4TR–84723–00	.GASKET, TAIL LENS	1					
4	4TR–84733–00	.LENS, TAILLIGHT	1					
5	97706–40620	.SCREW, TAPPING	2					
6	90387–06158	COLLAR	2					
7	90480–14555	GROMMET	2					
8	90201–06078	WASHER, PLATE	2					
9	95302–06600	NUT	2					
10	90445–09M32	HOSE (L9)	1					

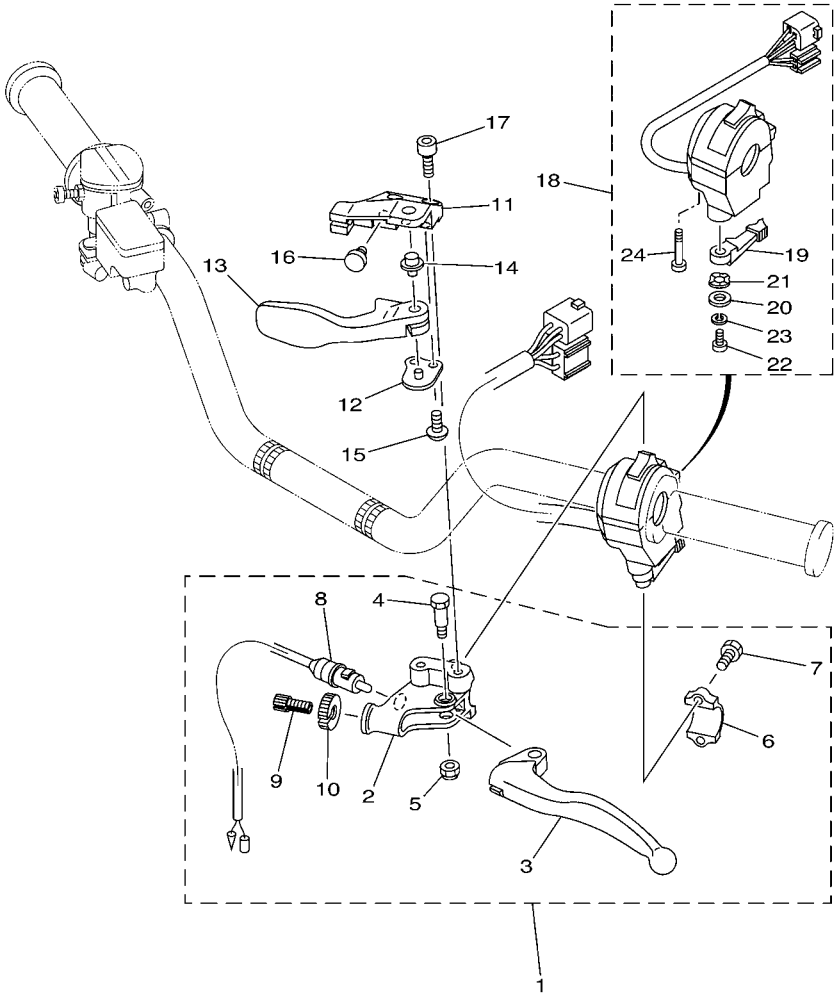

5YT1100-C400

FIG. 39 HANDLE SWITCH & LEVER

REF. NO.	PART NO.	DESCRIPTION	USA					REMARKS
1	5YT–82910–10	LEVER HOLDER ASSY (LEFT)	1					
2	5YT–82911–10	.HOLDER, LEVER 1	1					
3	2HT–83912–00	.LEVER 1	1					
4	90109–06798	.BOLT	1					
5	95602–06100	.NUT, U	1					
6	5TG–82913–00	.HOLDER, LEVER LOWER 1	1					
7	97002–05016	.BOLT	2					
8	5KM–82917–00	.SWITCH	1					
9	90123–08046	.BOLT	1					
10	90179–08148	.NUT	1					
11	5TG–25727–01	BRACKET, LEVER	1					
12	5D3–25689–00	PLATE, GUIDE	1					
13	5TG–25726–01	LEVER, BRAKE	1					
14	5TG–83923–00	COLLAR, LEVER 2	1					
15	92012–06014	BOLT, BUTTON HEAD	2					
16	90338–07007	PLUG	1					
17	92012–06014	BOLT, BUTTON HEAD	2					
18	5LP–83973–01	SWITCH, HANDLE 3	1					
19	5GH–83941–00	.LEVER, STARTER	1					
20	1UY–83909–00	.WASHER, SPECIAL	1					
21	3L4–83943–00	.WASHER, STARTER	1					
22	98517–05012	.SCREW, PAN HEAD	1					
23	92907–05100	.WASHER, SPRING	1					
24	98507–05030	.SCREW, PAN HEAD	2					

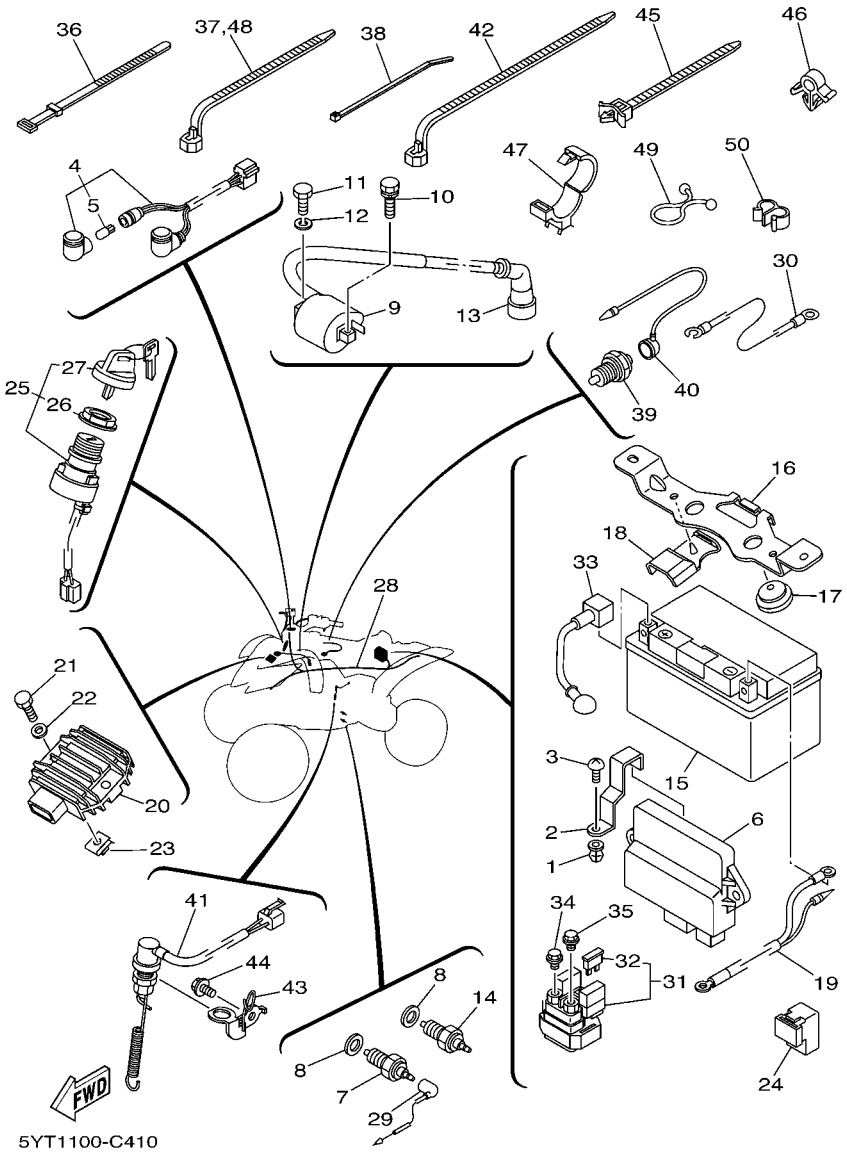

FIG. 40 ELECTRICAL 1

REF. NO.	PART NO.	DESCRIPTION	USA					REMARKS
1	90338–08226	PLUG	1					
2	5YT–8553A–00	STAY UNIT	1					
3	97702–60016	SCREW, TAPPING	1					
4	5YT–83530–00	PILOT LIGHT ASSY	1					
5	5GH–83516–00	.BULB (12V-1.7W T6.5)	2					
6	5YT–85540–00	C.D.I. UNIT ASSY	1					
7	3GB–82540–01	NEUTRAL SWITCH ASSY	1					
8	90430–10148	GASKET	2					
9	3KJ–82310–10	IGNITION COIL ASSY	1					
10	90109–06723	BOLT	1					
11	97002–06020	BOLT	1					
12	92902–06100	WASHER, SPRING	1					
13	1UY–82370–20	PLUG CAP ASSY	1					
14	3GD–82540–11	NEUTRAL SWITCH ASSY	1					
15	5VY–82100–00	BATTERY ASSY (YUASA YTZ10S)	1					
16	5YT–82128–00	BRACKET, BATTERY	1					
17	371–82121–00	PAD, BATTERY	2					
18	5YT–82129–00	COVER, BATTERY	1					
19	5YT–82116–00	WIRE, MINUS LEAD	1					
20	5GT–81960–00	RECTIFIER & REGULATOR ASSY	1					
21	97002–06025	BOLT	1					
22	92902–06600	WASHER, PLATE	1					
23	90183–061A1	NUT, SPRING	1					
24	3GD–81950–01	RELAY ASSY	1					
25	5LP–82510–00	MAIN SWITCH ASSY	1					
26	3HN–82569–00	.NUT, MAIN SWITCH	1					
27	3HN–82579–00	.CAP, KEY	1					

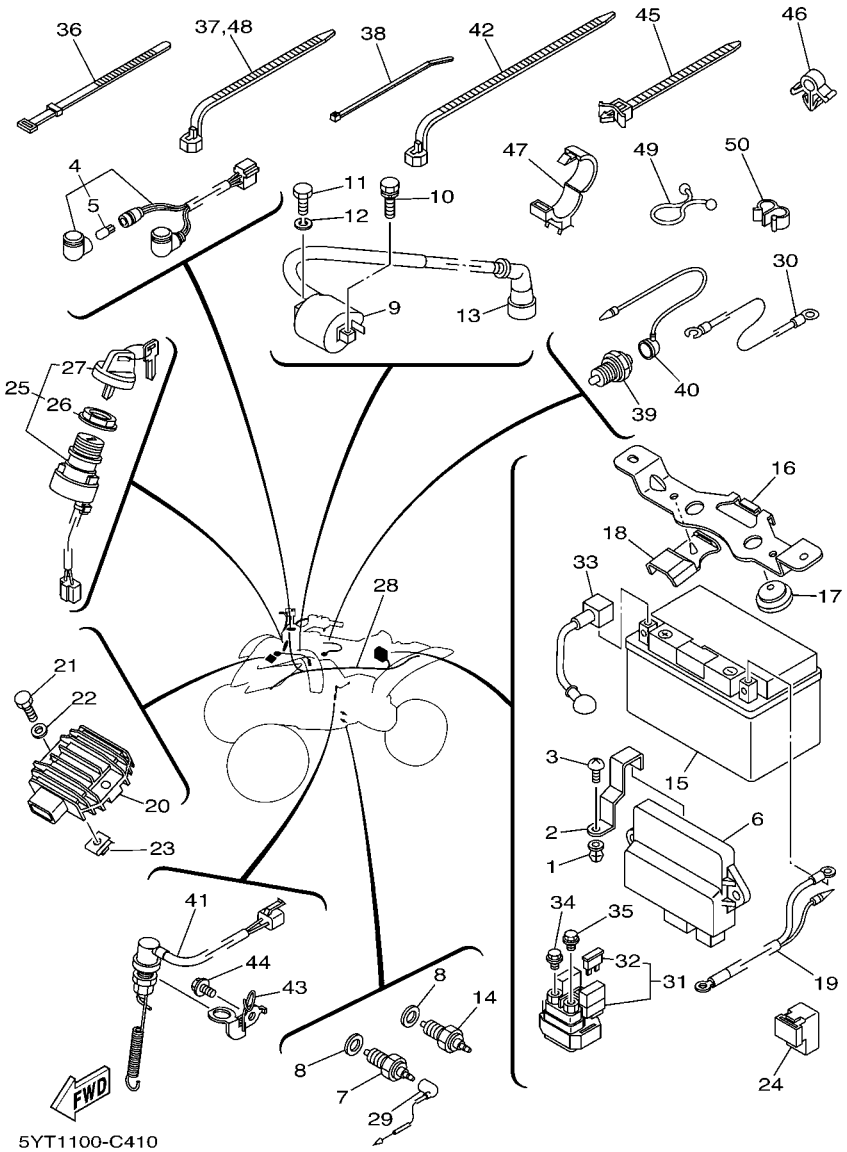

FIG. 40 ELECTRICAL 1

REF. NO.	PART NO.	DESCRIPTION	USA					REMARKS
28	5YT–82590–00	WIRE HARNESS ASSY	1					
29	5YT–82541–00	WIRE, LEAD	1					
30	3GD–82509–10	WIRE, SUB LEAD	1					
31	1D0–81940–02	STARTER RELAY ASSY	1					
32	36Y–82151–00	.FUSE (15A-BL)	2					
33	5YT–82115–00	WIRE, PLUS LEAD	1					
34	95022–06008	BOLT, FLANGE	1					
35	95022–06008	BOLT, FLANGE	1					
36	437–83936–01	BAND, SWITCH CORD	4					
37	90464–13073	CLAMP	1					
38	90465–10098	CLAMP	1					
39	4KD–82540–00	NEUTRAL SWITCH ASSY	1					
40	5YT–82507–00	WIRE, LEAD	1					
41	5NF–82530–00	STOP SWITCH ASSY	1					
42	90464–15195	CLAMP	2					
43	5YT–2144G–10	STAY, STOP SWITCH	1					
44	95802–06010	BOLT, FLANGE	1					
45	90464–12089	CLAMP	3					
46	90464–15157	CLAMP	1					
47	90464–30252	CLAMP	1					
48	90464–13073	CLAMP	1					
49	90465–18147	CLAMP	1					
50	90468–15139	CLIP	1					

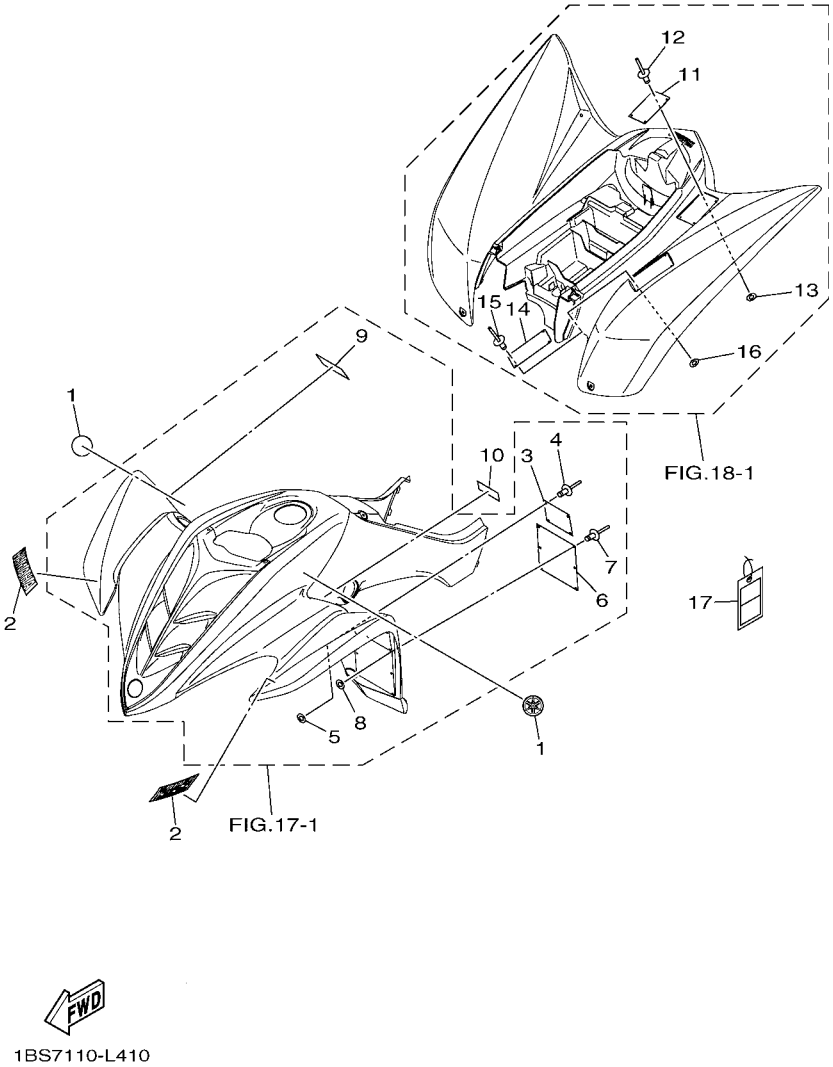

FIG. 41 EMBLEM & LABEL 1

REF. NO.	PART NO.	DESCRIPTION	USA					REMARKS
1	5FK–2175C–00	TUNING FORK MARK	2					
2	4ES–2153E–20	EMBLEM, YAMAHA	2					
3	4D3–2816L–00	LABEL, WARNING AGE	1					ENGLISH
4	90267–32004	RIVET, BLIND	4					
5	90201–03008	WASHER, PLATE	4					
6	5FE–21568–01	LABEL, WARNING	1					ENGLISH
7	90267–32004	RIVET, BLIND	6					
8	90201–03008	WASHER, PLATE	6					
9	5YT–2151E–30	LABEL 2	1					ENGLISH
10	43P–2817J–10	PLATE, ANSI SVIA	1					ENGLISH
11	5FE–2151H–01	LABEL 5	1					ENGLISH
12	90267–32004	RIVET, BLIND	4					
13	90201–03008	WASHER, PLATE	4					
14	5YT–2816M–U0	LABEL, WARNING TIRE & LOAD	1					
15	90267–32004	RIVET, BLIND	4					
16	90201–03008	WASHER, PLATE	4					
17	5LP–2819R–10	TAG, WARNING	1					

PART NO.	REF. NO.
5YT–11101–10	1 – 1
3Y1–1111F–00	1 – 24
31G–11127–00	1 – 9
3Y1–11127–00	1 – 7
3Y1–11133–11	1 – 2
31G–11161–00	1 – 8
5YT–11166–00	10 – 12
371–11167–01	10 – 3
1UY–11181–01	1 – 10
5NF–11185–00	1 – 17
2NL–11186–12	1 – 20
2NL–11187–11	1 – 21
5YT–11310–00	2 – 1
4KB–11351–00	2 – 7
1UY–11400–00	3 – 1
1UY–11422–00	3 – 3
1UY–11454–00	3 – 27
30X–11496–00	3 – 12
3Y1–11531–02	3 – 15
1UY–11536–01	3 – 26
30X–11565–00	3 – 16
4GB–11610–00	3 – 23
4GB–11610–20	3 – 23
4GB–11610–40	3 – 23
5UH–11631–00–C0	3 – 22
55V–11633–00	3 – 24
5UH–11636–00	3 – 22
5UH–11638–00	3 – 22
1UY–11651–00	3 – 9
30X–11681–00	3 – 7
1UY–12111–01	4 – 1
1UY–12113–01	4 – 4
1UY–12114–01	4 – 5
3Y1–12116–00	4 – 3
3Y1–12117–01	4 – 7
1J7–12118–00	4 – 8
1UY–12121–01	4 – 2
M01–12129–00	4 – 6
3GD–12151–11	4 – 9
4SH–12156–00	4 – 11
31G–12158–00	4 – 14
31G–12159–02	4 – 13
5UH–12170–10	5 – 1
5YT–12176–00	5 – 3
31G–12210–01	5 – 12
3GD–12213–00	5 – 15
31G–12214–00	5 – 14
31G–12222–00	5 – 13

PART NO.	REF. NO.
3Y1–12231–01	5 – 10
1UY–12241–00	5 – 11
1UY–13161–01	6 – 18
1UY–13300–00	6 – 1
1UY–13324–00	6 – 21
1UY–13326–00	6 – 2
3GD–13329–00	6 – 6
51Y–13411–00	6 – 9
2XK–13416–00	6 – 8
1UY–13440–02	6 – 13
3GD–13447–00	6 – 14
5YT–13586–00	7 – 1
5MP–14105–00	8 – 7
5YT–1410A–00	8 – 24
5YT–14112–00	8 – 5
5YT–14123–00	8 – 14
137–14133–00	8 – 46
80N–14139–00	8 – 42
5YT–14141–40	8 – 19
4KM–14142–22	8 – 39
354–14147–00	8 – 47
3H1–14147–00	8 – 9
5LP–14147–00	8 – 28
3GD–14155–00	8 – 41
522–14161–00	8 – 30
127–14186–00	8 – 16
5YT–14190–25	8 – 17
5LW–14191–00	8 – 26
24W–14193–00	8 – 49
5YT–14193–00	8 – 22
5YT–14194–00	8 – 6
5YT–14197–00	8 – 34
5YT–14197–10	8 – 44
5YT–14197–20	8 – 43
4KM–14216–00	8 – 20
3G2–14231–14	8 – 25
1HX–14231–33	8 – 21
3G2–1423A–79	8 – 10
5YT–14261–00	8 – 12
4WV–14293–00	8 – 48
5YT–14411–00	7 – 5
5YT–14412–01	7 – 10
5YT–1442F–00	7 – 16
5GH–14436–00	7 – 6
1UY–14451–00	7 – 9
4FU–14452–00	7 – 11
5YT–14453–00	7 – 14
59V–14457–00	7 – 12

PART NO.	REF. NO.
1UY–14458–01	7 – 7
1UY–14468–00	7 – 8
583–14561–00	8 – 13
5DM–14561–00	8 – 18
1FN–14565–00	8 – 32
1UY–14611–02	9 – 1
3GD–14613–00	9 – 17
5YT–14628–00	9 – 2
5YT–14708–01	9 – 11
5YT–14710–00	9 – 6
5TG–14752–00	9 – 12
4WM–14755–00	9 – 7
5YT–14787–00	9 – 14
5YT–14788–00	9 – 16
5YT–14901–10	8 – 1
5YT–1490H–00	8 – 40
5YT–1490J–10	8 – 2
5GH–14918–00	8 – 11
5KM–14937–00	8 – 38
8FA–14940–00	8 – 4
3H1–14962–00	8 – 8
5FU–14962–00	8 – 15
5DM–14985–00	8 – 33
28V–14988–00	8 – 45
3GD–15100–03	10 – 1
30X–15351–00	6 – 11
1UY–15362–01	11 – 20
3R4–15381–00	10 – 4
1UY–15383–00	10 – 6
3GD–15411–00	11 – 26
1UY–15421–00	11 – 13
3GD–15431–10	11 – 19
5YT–15441–10	10 – 14
3GD–15451–00	11 – 1
3GD–15461–00	11 – 17
1UY–15512–00	12 – 1
1UY–15517–01	12 – 6
1UY–15521–02	12 – 3
1UY–15590–01	12 – 9
21V–15719–00	11 – 6
3GD–15777–10	12 – 11
3GD–15787–03	11 – 3
1UY–16111–10	13 – 1
2NL–16150–00	13 – 6
30X–16154–00	13 – 7
1UY–16181–00	13 – 34
31A–16321–01	13 – 16
3J2–16324–00	13 – 11

PART NO.	REF. NO.
168–16325–00	13 – 10
5Y1–16331–01	13 – 9
5YT–16340–00	13 – 23
1UY–16351–00	13 – 12
1UY–16352–00	13 – 15
1UY–16356–00	13 – 31
1UY–16358–00	13 – 21
1UY–16371–02	13 – 8
1UY–16382–00	13 – 27
5Y1–16383–00	13 – 17
3LD–16398–00	13 – 32
1UY–17121–00	14 – 7
1UY–17123–00	14 – 22
1UY–17131–00	14 – 5
1UY–17151–00	14 – 2
1UY–17161–01	14 – 6
1UY–17211–00	14 – 19
5YT–17221–00	14 – 12
1UY–17223–02	14 – 27
1UY–17231–01	14 – 17
1UY–17241–00	14 – 16
1UY–17243–00	14 – 48
1UY–17251–00	14 – 18
1UY–17253–00	14 – 31
5YT–17261–00	14 – 15
1UY–17285–00	14 – 34
1UY–17401–01	14 – 1
1UY–17421–02	14 – 11
1UY–17431–00	14 – 47
1UY–17432–01	14 – 26
1UY–17523–00	14 – 30
1UY–17582–00	14 – 35
1UY–18101–01	15 – 8
5YT–18110–10	15 – 27
1UY–18112–10	15 – 33
5YT–18113–00	15 – 28
1JN–18115–00	15 – 34
4G0–18127–00	15 – 16
1UY–18140–00	15 – 13
2H9–18154–00	15 – 29
4SH–18198–00	30 – 26
1UY–18311–00	15 – 20
3GD–18420–00	15 – 18
1YW–18511–00	15 – 2
4GB–18512–00	15 – 3
1UY–18513–00	15 – 4
2A6–18531–00	15 – 21
4GB–18531–00	15 – 6

PART NO.	REF. NO.
22U–18535–00	15 – 5
5YT–18540–00	15 – 1
3GH–18542–00	15 – 19
5YT–21110–00	16 – 1
5YT–2117G–00	16 – 24
1UY–21315–20	16 – 2
1UY–21316–20	16 – 3
5YT–2144G–10	40 – 43
5YT–21471–00	16 – 15
5YT–21513–00	17 – 9
5YT–21514–00	17 – 12
5YT–2151E–30	41 – 9
5FE–2151H–01	41 – 11
4ES–2153E–20	41 – 2
5TG–21541–00	24 – 13
5YT–21562–00	17 – 15
5FE–21568–01	41 – 6
5YT–21613–10	18 – 10
5YT–21614–10	18 – 11
5LP–21621–00	18 – 13
5YT–2164F–10	18 – 14
5YT–2164G–10	18 – 21
5YT–2164H–10	18 – 15
5YT–2164J–10	18 – 22
5LP–21691–00	18 – 20
5YT–21711–10	19 – 1
5YT–21721–10	19 – 2
5FK–2175C–00	41 – 1
5YT–2210J–00	20 – 13
5YT–2210K–00	20 – 21
3GD–22110–30	20 – 1
2K6–22128–01	20 – 5
5YT–22129–00	20 – 16
1UY–22141–10	20 – 10
2GU–22151–00	20 – 3
3TB–22178–00	16 – 11
3GD–22184–00	20 – 7
4V4–22184–00	16 – 12
38W–22199–00	20 – 8
5YT–2219X–00	20 – 30
5YT–22210–40	21 – 1
4AA–22259–80	21 – 2
5YT–23350–10	23 – 34
5YT–23391–40	17 – 7
3GD–23501–10	23 – 17
3GD–23502–10	23 – 26
5YT–23517–00	23 – 4
	23 – 9

PART NO.	REF. NO.
5YT–23517–00	23 – 14
	23 – 23
3GD–23540–40	23 – 11
3GD–23550–40	23 – 20
3GD–23570–40	23 – 1
3GD–23580–40	23 – 6
1UY–23812–00	22 – 11
5YT–23813–20	22 – 1
8K1–23814–00	22 – 9
3GD–23831–00	22 – 2
1UY–23841–01	22 – 3
1UY–23845–01	22 – 4
5YT–23868–00	22 – 13
2GU–23872–00	16 – 20
1UY–23894–01	22 – 15
5YT–24110–10	24 – 1
8AC–2414B–01	17 – 17
5YT–2414H–00	24 – 21
5YT–24311–10	24 – 10
5YT–24423–00	8 – 3
21V–24500–20	24 – 4
4X8–24512–10	24 – 7
3AC–24523–00	24 – 8
5YT–24524–00	24 – 19
3AJ–24534–10	24 – 5
5KM–24610–00	24 – 12
5YT–24665–00	24 – 14
5YT–24710–01	25 – 1
214–24724–00	25 – 7
509–24724–00	25 – 4
5YT–24731–00	25 – 2
22W–24741–00	16 – 23
5YT–24776–10	25 – 5
3GD–25111–20	26 – 4
1UY–25117–00	26 – 6
1S3–25127–01	26 – 17
5YT–2514A–00	27 – 18
1S3–25180–00	26 – 1
5YT–25311–00	28 – 1
5YT–25317–00	28 – 2
5YT–25381–10	28 – 28
1S3–25383–20	28 – 17
5YT–25386–00	28 – 24
3GD–25388–00	28 – 11
1S3–25390–00	28 – 14
5TG–25438–10	28 – 25
5D3–25689–00	39 – 12
5YT–25712–00	29 – 1

PART NO.	REF. NO.
5TG–25726–01	39 – 13
5TG–25727–01	39 – 11
5LP–2580T–00	27 – 3
5LP–2580U–00	27 – 10
5YT–2580W–00	29 – 4
3GD–25827–00	27 – 8
3GD–25828–00	27 – 15
47X–2582A–50	33 – 3
3GD–2582T–10	27 – 1
5TG–2582W–00	29 – 2
5MV–25833–00	31 – 7
5LP–2583T–03	31 – 1
5YT–2583V–00	33 – 1
5LP–25852–02	31 – 4
3XP–25852–50	33 – 14
2VN–25854–00	33 – 15
4L0–25854–00	31 – 3
2VN–25855–00	33 – 16
2GU–25866–00	31 – 16
5MV–25867–00	31 – 6
5YT–25871–10	31 – 15
5YT–25872–11	31 – 13
5YT–25873–10	31 – 14
5YT–25874–10	33 – 22
5YT–25876–10	33 – 28
5VM–25886–10	23 – 32
5YT–25888–00	33 – 24
4EW–25894–00	33 – 13
5YT–25895–00	33 – 10
5MV–2589F–00	31 – 11
1UY–25917–51	29 – 11
1UY–25924–51	29 – 10
3GD–25933–00	27 – 9
	27 – 16
1UY–25933–51	29 – 13
1UY–25972–51	29 – 7
5YT–25977–50	29 – 12
5YT–26111–10	30 – 1
5YT–26124–20	30 – 21
1NV–26129–00	30 – 16
5YT–26150–20	30 – 25
1UY–26153–00	30 – 33
1UY–26157–00	30 – 36
3GD–26166–10	30 – 31
5LP–26241–00	30 – 2
4KB–26250–21	30 – 6
4KB–26256–00	30 – 10
4KB–26258–00	30 – 12

PART NO.	REF. NO.
1UY–26259–00	31 – 12
1NV–2625G–01	30 – 8
4KB–2628F–20	30 – 7
4KB–2628G–00	30 – 15
1NV–26304–00	30 – 14
5YT–26311–10	30 – 23
4KB–2632G–00	30 – 9
5YT–26331–00	30 – 24
5YT–26335–10	30 – 4
5YT–26341–01	30 – 5
1UY–26372–00	30 – 34
31A–26372–00	30 – 3
1NV–26398–00	30 – 17
371–27114–00	25 – 3
5YT–27211–10	32 – 4
4SS–27218–00	33 – 8
2YK–27222–00	33 – 9
5YT–27411–10	32 – 1
5YT–27421–10	32 – 3
2XK–28100–01	16 – 26
1NV–2811A–01	16 – 28
4D3–2816L–00	41 – 3
5YT–2816M–U0	41 – 14
43P–2817J–10	41 – 10
5LP–2819R–10	41 – 17
5GT–2836B–10	30 – 22
5YT–2845N–00	34 – 1
5YT–2845R–60	34 – 3
1UY–81175–01	11 – 28
5NF–81410–00	35 – 2
5NF–81450–01	35 – 1
5YT–81815–00	36 – 10
1UY–81818–50	36 – 3
1UY–81820–51	36 – 2
3GD–81826–00	36 – 5
8L6–81840–50	36 – 4
4H7–81843–50	36 – 9
4H7–81844–50	36 – 8
1UY–81847–50	36 – 7
8L6–81847–50	36 – 6
1UY–81890–00	36 – 1
1D0–81940–02	40 – 31
3GD–81950–01	40 – 24
5GT–81960–00	40 – 20
5VY–82100–00	40 – 15
5YT–82115–00	40 – 33
5YT–82116–00	40 – 19
371–82121–00	40 – 17

PART NO.	REF. NO.
5YT–82128–00	40 – 16
5YT–82129–00	40 – 18
3TJ–82131–00	16 – 27
36Y–82151–00	40 – 32
3KJ–82310–10	40 – 9
1UY–82370–20	40 – 13
5YT–82507–00	40 – 40
3GD–82509–10	40 – 30
5LP–82510–00	40 – 25
5NF–82530–00	40 – 41
4KD–82540–00	40 – 39
3GB–82540–01	40 – 7
3GD–82540–11	40 – 14
5YT–82541–00	40 – 29
3HN–82569–00	40 – 26
3HN–82579–00	40 – 27
5YT–82590–00	40 – 28
5YT–82910–10	39 – 1
5YT–82911–10	39 – 2
1S3–82913–00	30 – 18
5TG–82913–00	39 – 6
5KM–82917–00	39 – 8
5GH–83516–00	40 – 5
5YT–83530–00	40 – 4
1UY–83909–00	39 – 20
2HT–83912–00	39 – 3
5LP–83922–00	31 – 8
5TG–83923–00	39 – 14
437–83936–01	40 – 36
5GH–83941–00	39 – 19
3L4–83943–00	39 – 21
5LP–83973–01	39 – 18
5LP–83980–00	31 – 10
5TG–84110–03	37 – 2
5TG–84140–01	37 – 4
5TG–84165–01	37 – 3
5TG–84166–01	37 – 8
5TG–84310–03	37 – 7
4KB–84314–01	37 – 1
	37 – 6
5TG–84340–01	37 – 9
5LP–84700–00	38 – 1
256–84714–60	38 – 2
4TR–84723–00	38 – 3
4TR–84733–00	38 – 4
5YT–8553A–00	40 – 2
5YT–85540–00	40 – 6
5LP–W0041–00	31 – 2

PART NO.	REF. NO.
5FK–W0042–50	33 – 2
5LP–W0045–00	27 – 7
	27 – 14
5LP–W0046–50	29 – 8
3GD–W0047–00	27 – 5
	27 – 12
5LP–W0047–50	29 – 6
1UY–W0048–50	27 – 6
	27 – 13
	29 – 9
3GD–W0057–00	27 – 4
	27 – 11
5LP–W0057–50	29 – 5
1UY–W1141–00	3 – 2
5YT–W2151–12	17 – 1
5YT–W2161–11	18 – 1
90101–08006	28 – 12
90101–10016	5 – 5
90101–10017	3 – 17
90101–10029	28 – 8
90101–12024	21 – 3
90101–12032	28 – 5
90105–08161	27 – 17
90105–08182	29 – 14
90105–10131	23 – 35
90105–10135	23 – 29
90105–10136	1 – 14
90105–10137	1 – 13
90105–10185	16 – 9
90105–10211	16 – 7
90105–10277	16 – 8
90105–12050	20 – 19
	21 – 8
90105–12061	20 – 26
	20 – 28
90105–14003	15 – 25
90109–06172	17 – 2
90109–06189	15 – 15
90109–06240	33 – 25
90109–06723	40 – 10
90109–06798	39 – 4
90109–08082	27 – 2
90109–08100	16 – 16
	16 – 25
	34 – 2
90109–081F0	29 – 3
90109–10013	28 – 26
90110–06134	9 – 15

PART NO.	REF. NO.
90110–06189	6 – 17
90111–05044	17 – 8
90113–06055	28 – 30
90114–10006	26 – 5
90114–10013	28 – 18
90116–06041	1 – 6
90119–06152	17 – 6
	18 – 2
	18 – 3
90123–08046	39 – 9
90149–06108	24 – 9
90149–06117	27 – 19
90149–08031	12 – 10
90150–06010	19 – 4
90151–05023	11 – 7
90151–06010	6 – 5
90154–05043	18 – 16
	18 – 23
90154–06031	18 – 17
	18 – 24
90154–06032	17 – 3
	18 – 4
	18 – 6
	18 – 8
90159–06029	13 – 14
90170–06023	30 – 30
90170–06228	15 – 35
90170–10010	22 – 6
90170–16326	3 – 32
	13 – 19
90170–16343	13 – 5
90170–33010	28 – 29
90171–10001	22 – 7
	22 – 21
	23 – 19
	23 – 28
	23 – 37
90171–14002	26 – 15
90171–14004	28 – 22
90179–06668	9 – 18
90179–08148	39 – 10
90179–10024	28 – 10
90179–12009	28 – 7
90179–20255	14 – 44
90183–05008	17 – 5
90183–06069	19 – 5
90183–061A1	40 – 23
90185–08017	16 – 5

PART NO.	REF. NO.
90185–10011	16 – 10
	28 – 27
90185–10012	23 – 31
	23 – 36
90185–10019	22 – 18
90185–12007	21 – 6
90185–16002	20 – 12
90201–03008	41 – 5
	41 – 8
	41 – 13
	41 – 16
90201–05015	9 – 4
	9 – 9
90201–06036	30 – 40
90201–06078	37 – 12
	38 – 8
90201–06085	11 – 15
90201–06089	17 – 11
	17 – 14
90201–063F3	20 – 18
	23 – 16
	23 – 25
90201–08048	9 – 20
	18 – 29
90201–08054	16 – 13
	20 – 32
90201–08066	33 – 18
90201–08070	13 – 28
90201–10036	22 – 17
90201–10037	23 – 30
90201–10052	28 – 9
90201–10058	3 – 20
90201–10118	31 – 19
	33 – 21
	33 – 27
90201–10128	1 – 15
90201–10591	5 – 6
90201–12032	21 – 5
90201–12033	21 – 4
90201–12045	28 – 6
90201–12163	13 – 24
90201–123K4	12 – 4
90201–14021	28 – 21
90201–14586	26 – 14
90201–14691	15 – 11
90201–15018	15 – 31
	32 – 5
90201–150U6	14 – 29

PART NO.	REF. NO.
90201–16018	20 – 11
90201–17255	14 – 49
90201–203E7	14 – 13
90201–207G6	3 – 30
90201–22793	14 – 36
90201–244A9	20 – 6
90201–25291	12 – 7
90201–256E6	14 – 20
90201–28665	14 – 32
90206–12001	4 – 10
90209–18208	14 – 3
90209–33253	3 – 10
90215–06162	1 – 26
90215–08260	15 – 17
90215–16156	13 – 3
90215–16222	13 – 4
90215–16258	13 – 18
90215–16270	3 – 33
90215–21239	14 – 43
90240–07105	3 – 4
90240–08005	33 – 17
90267–32004	41 – 4
	41 – 7
	41 – 12
	41 – 15
90269–07076	19 – 3
90280–05013	6 – 22
90280–05048	3 – 21
90282–05034	3 – 31
90282–07057	13 – 2
90338–07007	39 – 16
90338–08226	7 – 20
	40 – 1
90338–18122	16 – 21
90338–23172	16 – 22
90340–14117	11 – 8
90381–15088	23 – 2
	23 – 7
	23 – 12
	23 – 21
90383–20032	20 – 14
	20 – 22
90386–12093	13 – 33
90387–06158	38 – 6
90387–062E0	18 – 18
	18 – 25
90387–063W7	30 – 28
90387–066J1	24 – 17

PART NO.	REF. NO.
90387–07021	24 – 15
90387–07598	37 – 11
90387–084N8	20 – 33
90387–090R0	22 – 16
90387–101R3	23 – 3
	23 – 8
	23 – 13
	23 – 22
90387–12020	21 – 10
90387–12021	20 – 24
90387–125N8	20 – 15
90387–127G8	21 – 7
90387–150R1	26 – 13
90387–16547	2 – 3
90387–176R6	22 – 20
90387–257N4	14 – 46
90401–06001	1 – 4
90401–08004	6 – 20
90401–10015	31 – 18
	33 – 20
	33 – 26
90430–06014	10 – 11
	11 – 12
	11 – 24
90430–06192	1 – 5
90430–08119	6 – 19
90430–10148	40 – 8
90430–14194	15 – 26
90430–14240	1 – 12
90445–084J1	24 – 20
90445–09M32	38 – 10
90450–52003	7 – 4
90450–63004	7 – 17
90460–75020	7 – 15
90464–12089	40 – 45
90464–13073	24 – 23
	40 – 37
	40 – 48
90464–15157	40 – 46
90464–15195	24 – 22
	40 – 42
90464–30252	40 – 47
90465–08045	11 – 25
90465–10098	40 – 38
90465–18147	40 – 49
90467–10038	24 – 11
90467–11044	33 – 11
90467–140A4	10 – 13

PART NO.	REF. NO.
90467–140A6	33 – 12
90467–220A1	7 – 13
90468–15139	40 – 50
90480–01400	24 – 2
90480–14102	37 – 5
	37 – 10
90480–14555	38 – 7
90480–15005	7 – 19
90480–18290	24 – 3
90501–07629	3 – 5
90501–10353	15 – 24
90501–18576	6 – 10
90501–22721	3 – 13
90501–231E9	13 – 13
90506–20026	32 – 8
90508–16022	13 – 26
90508–23567	25 – 6
90508–25712	15 – 14
90508–32711	15 – 9
90508–35764	30 – 27
90560–14284	15 – 12
91312–06020	1 – 23
	6 – 16
91312–06025	1 – 19
91312–06030	2 – 6
91312–08025	7 – 3
91312–08050	1 – 16
91401–16012	33 – 19
91401–20020	22 – 8
	22 – 19
	22 – 22
	23 – 18
	23 – 27
	23 – 38
91401–30025	26 – 16
91401–30030	28 – 23
91609–40016	30 – 35
91A20–07010	8 – 50
92012–06014	39 – 15
	39 – 17
92012–06025	11 – 27
92012–08020	30 – 38
92012–08030	33 – 23
92502–06030	35 – 3
92902–04100	8 – 36
92902–05600	30 – 20
92902–06100	35 – 4
	40 – 12

PART NO.	REF. NO.
92902–06200	9 – 5
	9 – 10
92902–06600	5 – 18
	35 – 5
	40 – 22
92902–10100	3 – 18
92902–10200	26 – 12
	28 – 20
92906–04100	33 – 6
92906–04600	33 – 7
92907–04600	8 – 37
92907–05100	39 – 23
93101–25106	3 – 28
93102–12224	13 – 30
93102–14209	15 – 10
93102–15212	15 – 22
93102–22216	26 – 10
93102–25081	16 – 18
93102–25099	16 – 19
93102–28017	11 – 5
93102–35393	14 – 45
93104–09025	30 – 13
93104–17094	14 – 9
93104–20068	14 – 25
93105–26026	26 – 9
93106–46001	28 – 4
93108–35004	20 – 4
93109–08050	30 – 37
93109–20076	20 – 23
93112–31011	22 – 12
93210–06422	13 – 22
93210–07590	15 – 7
93210–09165	4 – 12
93210–14369	11 – 9
93210–15414	15 – 30
93210–15620	33 – 4
93210–16290	3 – 19
93210–17003	5 – 2
93210–18322	2 – 4
93210–19522	11 – 21
93210–22164	14 – 41
93210–35520	6 – 12
93210–44545	7 – 2
93210–54175	6 – 15
93210–57634	1 – 22
93210–86509	2 – 2
93211–06635	1 – 18
93306–00006	13 – 20

PART NO.	REF. NO.
93306–00308	14 – 52
93306–00431	14 – 39
93306–00438	5 – 7
93306–00446	26 – 7
93306–00502	5 – 8
93306–00710	28 – 3
93306–07801	11 – 4
93306–20231	26 – 8
93306–20301	14 – 10
	14 – 51
93306–20352	16 – 17
93306–20401	14 – 23
93306–20501	14 – 40
93306–20532	3 – 29
93306–27202	14 – 8
93306–30424	14 – 24
93306–30622	3 – 11
93310–212L6	12 – 2
93310–225N0	12 – 8
93310–633T5	3 – 8
93311–41587	14 – 28
93317–22237	20 – 2
93410–20038	14 – 14
	14 – 38
93410–22039	14 – 4
	14 – 37
93430–12008	15 – 32
	32 – 6
93440–12052	1 – 3
93440–25084	14 – 21
	14 – 50
93440–28062	14 – 33
93450–19095	3 – 25
93503–08007	15 – 23
93602–13177	3 – 6
93603–07073	6 – 4
93603–12030	6 – 3
93604–10011	5 – 4
93605–10090	3 – 14
93700–06004	20 – 17
	20 – 25
	23 – 5
	23 – 10
	23 – 15
	23 – 24
93834–13030	14 – 42
93900–00022	26 – 3
	28 – 16

PART NO.	REF. NO.
94107–10028	26 – 2
94110–09028	28 – 15
94500–02090	5 – 9
94581–87098	28 – 31
94681–87011	28 – 32
94701–00333	1 – 27
95022–06008	9 – 13
	40 – 34
	40 – 35
95022–06016	11 – 16
95022–06020	11 – 14
95022–06025	5 – 16
	11 – 10
95022–06030	10 – 8
	11 – 22
	36 – 12
95022–06040	11 – 23
95022–06045	11 – 11
95022–06050	10 – 9
95022–06060	10 – 10
95302–06600	36 – 11
	38 – 9
95302–06700	15 – 36
95302–08600	28 – 13
95302–10700	22 – 5
95317–06700	30 – 29
95602–05100	30 – 11
95602–06100	39 – 5
95602–06200	17 – 4
	18 – 5
	18 – 7
	18 – 9
	18 – 19
	18 – 26
95602–08200	18 – 30
95602–12200	20 – 20
	20 – 27
	20 – 29
	21 – 9
95701–06500	31 – 9
95702–08500	20 – 34
95702–10500	26 – 11
	28 – 19
95802–06010	40 – 44
95802–06020	33 – 29
95802–06025	37 – 13
95802–06030	24 – 16
	24 – 18

PART NO.	REF. NO.
95802–08040	20 – 9
95802–08045	10 – 15
95812–06014	17 – 10
	17 – 13
95812–06035	30 – 39
95812–08012	16 – 4
95812–08016	9 – 19
	34 – 4
95812–08055	16 – 6
95812–10025	32 – 2
	32 – 7
95822–06010	17 – 16
95822–06016	23 – 33
95822–06025	31 – 17
95822–08012	16 – 14
	18 – 12
95822–08020	18 – 27
95822–08025	18 – 28
95822–08030	22 – 10
97002–05016	39 – 7
97002–06012	1 – 25
97002–06020	40 – 11
97002–06025	40 – 21
97002–08030	20 – 31
97012–06020	15 – 37
97022–06016	5 – 17
97022–08060	22 – 14
97702–60016	40 – 3
97702–60025	7 – 18
97706–40620	38 – 5
98501–04014	8 – 35
98502–04008	30 – 32
98502–05014	35 – 6
98502–05020	30 – 19
98502–06012	10 – 5
	11 – 29
98506–04012	33 – 5
98507–03008	24 – 6
98507–04006	8 – 27
98507–04008	8 – 31
98507–04010	8 – 23
98507–04012	8 – 29
98507–05030	39 – 24
98517–05012	39 – 22
98702–04012	31 – 5
98702–06016	10 – 7
98702–06030	6 – 7
98902–06010	9 – 3

PART NO.	REF. NO.
98902–06010	9 – 8
99001–07600	13 – 29
99001–09600	13 – 25
99009–12400	12 – 5
99530–12016	10 – 2
	11 – 2
	11 – 18
99530–14016	1 – 11
	2 – 5

PART NO.	REF. NO.

PART NO.	REF. NO.

PART NO.	REF. NO.

PART NO.	REF. NO.